First-Principles Calculations of Polythiophene Derivatives

メタデータ	言語: English 出版者: 公開日: 2017-10-05 キーワード (Ja): キーワード (En): 作成者: ホトマ ミナル ルビス, パトリシア, Hotma Minar Lubis, Patricia メールアドレス: 所属:
URL	http://hdl.handle.net/2297/40438

This work is licensed under a Creative Commons Attribution-NonCommercial-ShareAlike 3.0 International License.

First principles calculations of polythiophene derivatives

Patricia Lubis[1] and Mineo Saito[1]

[1] *Division of Mathematical and Physical Science, Graduate School of Natural Science and Technology, Kanazawa University, Kakuma, Kanazawa 920-1192, Japan*

Recently, conjugated polymers have attracted much attention because of the organic solar cell (OSC) application. The low band gap of conjugated polymer is necessary to increase the efficiency of OSC. Finding the low band gap of polythiophene derivatives is necessary for OSC application. We use B3LYP/6-31G(d,p) method on this calculations. Then, we use the extrapolation scheme to estimate the band gap of the infinite-size polymer. The band gaps of polythiophene, P3HT, poly(2-ethenylthiophene), and PITN are close to the experimental values. The calculated band gaps of polythiophene derivatives are in the range of 1.10 - 1.81 eV; therefore, we have demonstrated that the band gaps can be controlled using polythiophene derivatives. In this study, we clarify the mechanism of band gap decreases in some of polythiophene derivatives.

1. Chapter 1

1.1 Background

Nowadays, explorations of conjugated polymers are extensively carried out due to the electronic and optical properties. Many potential applications of conjugated polymers are conducted, such as light emitting diode, photovoltaic devices, field-effect transistors and elecro-magnetic shielding.[1–5)]

Conjugated polymers consist of alternating double and single bonds of organic molecules. Conjugated polymers form sp^2 hybridized and the sp^2 bonds form three strong σ-bonds with neighbouring atoms. The remaining p_z-orbitals of the carbon atoms form delocalized electrons through the formations of weaker π-bonds. The π-electrons move from one bond to the other, which makes conjugated polymers quasi-one-dimensional semiconductors.

The bands of organic semiconductors contain of highest occupied molecular orbital (HOMO) and lowest unoccupied molecular orbital (LUMO). The top of valence band corresponds to the HOMO and the lowest of conduction band correspond to the LUMO in conjugated polymers.

Conjugated polymers have useful electronic and optoelectronic properties and one of

the well-known application is organic solar cells (OSCs). The development of conjugated polymers for organic solar cell (OSCs) is widely investigated. In this chapter we overview the basic of organic solar cell.

1.2 Organic Solar cell

The idea of using organic molecules as organic photovoltaic originated from the photosynthetic systems in the early of 1950's. The plant absorbs the light and convert the solar energy into useful chemical energy. In the early experiment, the organic dyes such as phtalocyanines, chlorophylls, porphyrins were used and they are located between the anode and cathode. The efficiency of OSC is less then 1%. In 1990's, Sariciftci et al. discovered the highly efficiency organic photovoltaic by using the conjugated polymer and buckminster−fullerene (C_{60}).[6–10] Until now, the efficiency of OSC using conjugated polymer and C_{60}−like reaches 10%.[11]

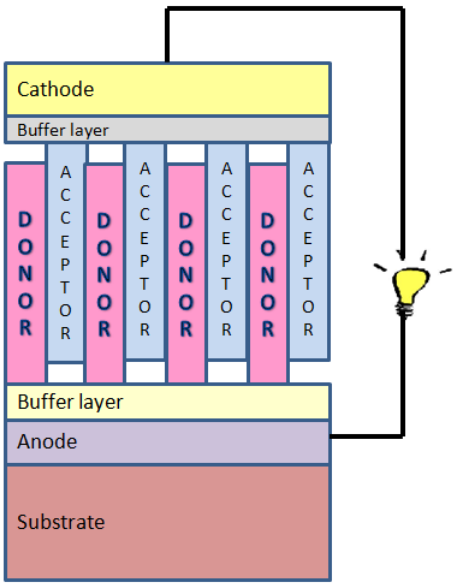

Fig. 1. Organic solar cell scheme.

Organic solar cell consists of several layers, such as cathode layer, anode layer, substrate, buffer layer and an active layer. The active layer contains conjugated polymers. The active layer has function as donor and acceptor as shown in Fig.1. The donor (D) part produces excitons and mainly holes transport. Meanwhile the acceptor (A) part receives the electron charge.

The power conversion efficiency (PCE),(η) of solar cell is defined as followed,

$$\eta = \frac{P_{out}}{P_{in}} = \frac{I_{mpp} \cdot V_{mpp}}{P_{in}} = \frac{FF \cdot I_{sc} \cdot V_{oc}}{P_{in}} \tag{1}$$

where P_{out} is the maximum power output, P_{in} is the incident power on the solar cell. I_{sc} is short circuit photocurrent, V_{oc} is the voltage of open circuit and FF is fill factor.[7,10] The photocurrent I_{sc} is proportional to the amount of light which is absorbed in the active layer. The absorber layer should have a wide absorption spectrum from the visible spectrum to near infra red spectrum. The V_{oc} is related to the built-in potential and V_{oc} is proportional to the difference between the energy of HOMO at the donor and the energy of the LUMO at the acceptor

$$V_{oc} \propto (1/e)(\mid E_{donor} HOMO \mid - \mid E_{acceptor} LUMO \mid) - \delta \tag{2}$$

where δ is the energy loss. The energy loss (δ). To overcome this problem, we need a low band gap of conjugated polymer; the band gap energy should be below 2 eV.[10]

1.3 The purpose

Conjugated polymers are attractive materials for the OSC application because of the electronic, optical and mechanical properties. The wide band gap of polythiophene is an obstacle to increase the OSCs efficiency. Therefore, it is necessary to find out polythiophene derivatives that have low band gaps. We studied some polythiophene derivatives as shown in Fig.2.

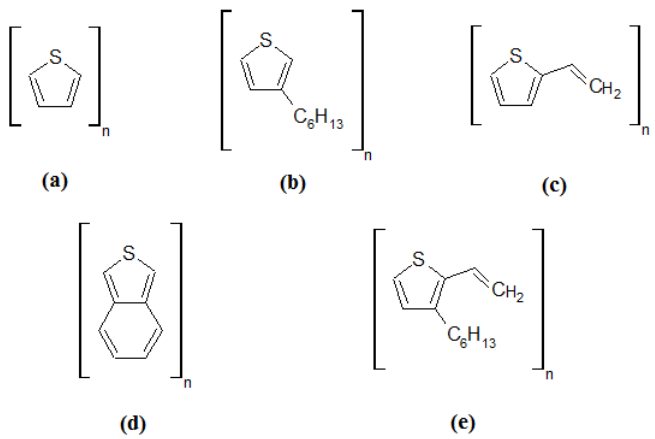

Fig. 2. Polythiophene derivatives: (a) Polythiophene (P1), (b) P3HT (P2), (c) Poly(2-ethenylthiophene) (P3), (d) PITN (P4), and (e) Poly(2-ethenyl-3-hexylthiophene) (P5).

2. Chapter 2

In this chapter, we explain the methods for calculation of the band gaps of polythiophene derivatives. First, we explain the basic concept of density functional theory and the parameters that we use in this calculation. Next, we confirm the reliability of electronic structure calculation. Finally, we explain the extrapolation scheme to calculate the band gap of infinite-size polymers.

2.1 Density Functional Theory

Density functional theory (DFT) is a theoretical calculation to obtain an approximate solution for the Shrodinger equation of a many-body system.[12)] In a simple way, DFT helps us to to investigate the structural, magnetic and electronic properties of molecules, materials and defects. The DFT originates from statistical theory of atoms that proposed by Thomas and Fermi in 1972. The kinetic energy of system of electrons is approximated as an explicit functional of electron density. The Thomas-Fermi approach neglected exchange and correlation among the electron as shown in Eq.3

$$E_T F[n] = C_1 \int d^3 r n(r)^{5/3} + \int d^3 r V_e x t(r) n(r) + C_2 \int d^3 r n(r)^{4/3} + \frac{1}{2} \int d^3 r d^3 r' \frac{n(r) n(r')}{\mid r - r' \mid} \tag{3}$$

2.2 Hybrid-DFT

The hybrid exchange approximation to DFT can be expressed by Becke three parameter Lee-Yang-Par (B3LYP) functional. B3LYP functional firstly introduce by Axel Becke in 1993. The functional originally is developed to improve the ground state description. The definition of the exchange-correlation energy is

$$a_0 E^X_{SCF} + (1 - a_0) E^X_{LDA} + a_X E^X_B + ()1 - a_C) E_V W N^C + a_C E_L Y P^C \tag{4}$$

where E^X_{SCF} is the SCF exchange energy, E^X_{LDA} is the LDA exchange energy. The constant function is a_0=0.2, $a_X = 0.72$ and $a_C = 0.81$.

2.3 Basis Set

Among many different approximation methods to solve the Schrödinger equation, one of the approximation method is basis set. Basis sets are sets of mathematical functions describe the wavefunction. John. C. Slater proposed Slater Type Orbitals (STOs),[13)]

$$\psi = a_1\phi_1 + a_2\phi_2 + ... + a_k\phi_k \tag{5}$$

where k is the size of basis set, $\phi_1, \phi_2, ..., \phi_k$ are the basis functions and $a_1, a_2, ..., a_k$ are the normalizations constants. The solution of the Schrödinger equation for the hydrogen atom and other one-electron ions gives atomic orbitals which are a product of a radial functions depend on the distance of the electron from the nucleus and a spherical harmonic.

Slater-type orbitals describe the real situation for the electron density in the valence region and beyond, however Slater-type orbitals are not good for the near nucleus region. The general expression for a basis function is given in Eq.6

$$\chi_{\zeta,n,l,m}(r,\theta,\varphi) = NY_{l,m}(\theta,\varphi)r^{n-1}e^{-\zeta r} \tag{6}$$

where N is a normalization constant and Y_{lm} is spherical harmonic function. The exponential depend on the distance between the nucleus and the electron mirror. The n, l, and m are quantum numbers, angular momentum and magnetic, respectively. STO is commonly used for atomic and diatomic systems where high accuracy is required.

2.4 Reliability of electronic structure calculation

The reliability of band gap calculations is shown in the basis sets performance. In this work, besides the 6-31G(d,p) basis set, we also try the band gap calculations using 6-311(d,p) and cc-pVQZ basis sets. The basis set of 6-31G(d,p) is expected to be reliable.

Table I. Calculation of the band gap of polythiophene using several basis sets.

Basis set	Band gap (eV)
6-31G (d,p)	1.92
6-311G (d,p)	2.09
cc-pVQZ	1.86
Experiment	2.00

2.5 Extrapolation scheme for estimation of band gaps in conjugated polymers

In this work, to calculate the band gaps of infinite-size of conjugated polymers, we use extrapolation scheme method. First, we calculate the HOMO-LUMO gap energy of finite-size oligomers of polythiophne derivatives. Then, we fitted the values of HOMO-

LUMO gap energy using an extrapolation scheme,[14)]

$$E_g(N_i) = E_g + \frac{a}{N_i}, \tag{7}$$

where $E_g(N_i)$ corresponds to the HOMO-LUMO gap of oligomers and N_i is the number of carbon atoms in the conjugated chain in an oligomer. a and E_g are determined by fitting to the calculated values of $E_g(N_i)$, and E_g corresponds to the band gap of the infinite-length polymer, $E_g(\infty)$.

To predict the infinite-size of HOMO energy level and LUMO energy level of conjugated polymers, we use derivation of the Eq.7 and then we plot the HOMO energy and LUMO energy by the following equation

$$E_{level}(N) = b_{level} + \frac{a}{N}, \tag{8}$$

where E_{level} is the HOMO or LUMO energies of oligomers, and N is the number of carbon atoms in a conjugated chain. b_{level} is the HOMO energy or LUMO energy of the infinite-length polymers.

3. Chapter 3

3.1 Polythiophene (P1)

The band gap of infinite-size polythiophene carried out by using hybrid-DFT [Fig. 2(a)]. After that, we estimate the band gap of the infinite-size polymer using the extrapolation scheme. As shown in Fig. 3, the calculated HOMO-LUMO gaps of the oligomers are well fitted to Eq. (7).

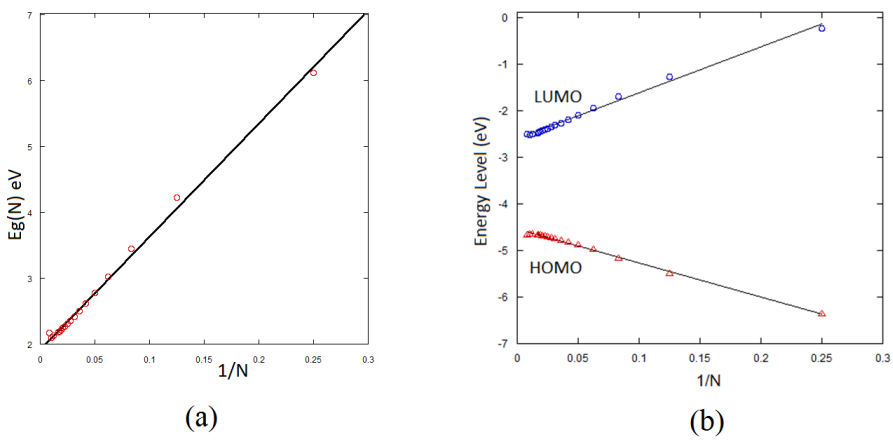

Fig. 3. Calculation of P1 oligomers (a) Band gap and (b) HOMO and LUMO energy level.

The calculations of the oligomers are well fitted, since R^2 is close to 1. Therefore, we successfully determine the band gap of the infinite-size polythiophene: the estimated value is 1.92 eV [Table II], which is close to the experimental value (2.0 eV).[4)]

Table II. Band gaps of polythiophene derivatives calculated using the extrapolation scheme. N_{max} is the number of carbon atoms in the conjugated chain for the maximum oligomer used in the calculations.

System	HOMO (eV)	LUMO (eV)	Eg (eV)	Eg (Exp.) (eV)	R^2	N_{max}
P1	-4.52	-2.6	1.92	2[4)]	0.9964	120
P2	-4.09	-2.28	1.81	1.8[3)]	0.9948	52
P3	-4.41	-2.80	1.61	1.8[?)]	0.9955	66
P4	-4.02	-2.92	1.10	1.1[3)]	0.9953	120
P5	-4.08	-2.69	1.39	-	0.9936	106

As shown in Fig. 3(b), the calculated energies of HOMO and LUMO are well fitted to Eq. (8). In the case of the monomer, the HOMO and LUMO energies are -6.35 and -0.23 eV, respectively; therefore, the HOMO-LUMO gap is 6.12 eV, as shown in Table III. We estimate that the energies of HOMO and LUMO in the infinite-size polymer are -4.52 and -2.60 eV, respectively. Therefore, the HOMO-LUMO gap of the polymer is 4.20 eV lower than that of the monomer.

Table III. Calculated HOMO-LUMO gaps of thiophene derivatives monomers.

System	HOMO (eV)	LUMO (eV)	HOMO-LUMO gap (eV)
P1	-6.35	-0.23	6.12
P2	-6.15	-0.04	6.11
P3	-5.76	-1.02	4.74
P4	-5.62	-0.89	4.73
P5	-5.39	-1.38	4.01

3.2 P3HT (P2)

P2 consists of thiophene and hexyl [Fig. 2(b)]. We estimate the band gap of the infinite-size polymer to be 1.81 eV [Table II], which is close to the experimental value (1.8 eV).[3)] Although the band gap of P2 is lower than that of P1, the HOMO-LUMO gap of the monomer of P2 (6.11 eV) is very similar to that of P1(6.12 eV) [Table III]. This

similarity in energy is due to the fact that there is no interaction between the hexyl and the double bond in P1 in the case of the monomer of P2.

3.3 Poly(2-ethenylthiophene)(P3)

We study the band gap of P3 [Fig. 2(c)].The estimated band gap of P2 is 1.61 eV. The calculated energy of the HOMO in the infinite-size polymer is 0.11 eV higher than that in P1, and the energy of the LUMO in the infinite-size polymer is 0.20 eV lower than that of P1. As a result, the band gap of P3 is 0.31 eV lower than that in P1, as shown in Table II.

3.4 PITN (P4)

P4 consists of thiophene and a benzene ring, as shown in Fig. 2(d). We carry out hybrid-DFT calculations from the monomer to the 15-mer. Next, we estimate the band gap of the infinite-length polymer using the extrapolation scheme. The estimated band gap of PITN is 1.1 eV, which is consistent with the experimental value (1.1 eV).[3)] The calculated energy of the HOMO of PITN is 0.50 eV higher than that of polythiophene, and the energy of the LUMO of PITN is 0.32 eV lower than that of polythiophene. As a result, the band gap of PITN is 0.82 eV lower than that of polythiophene, as shown in Table II.

3.5 Poly(2-ethenyl-3-hexylthiophene)(P5)

P5 consists of 3-hexylthiophene and ethenyl, as shown in Fig. 2(e). There is no experimental band gap data for this P5; therefore, we predict the band gap of this system. We carry out hybrid-DFT calculations up to the 17-mer. Then, we estimate the band gap of the infinite-length polymer using the extrapolation scheme.

The estimated band gap of P4 is 1.39 eV. Therefore, the band gap of P4 is 0.22 eV lower than that of P2. We evaluate the energies of the HOMO and LUMO in this polymer, as shown in Table II. The energy of the HOMO in this polymer is 0.33 eV higher than that of P2, and the energy of the LUMO is 0.11 eV higher than that of P2. As a result, the band gap of P4 is 0.22 eV lower than that of P2, as shown in Table II.

3.6 Mechanism of band gap decreases

Our finding of the decrease in band gap by modifying polythiophene indicates that the band gap of polythiophene can be suitably modified using polythiophene derivatives. Therefore, a theoretical design based on first-principles calculations is important. We

discuss the mechanisms underlying the decrease in the band gaps in thiophene derivatives in previous sections. Here, we summarize the mechanisms.

(A) *Hexyl effect*

The calculated band gap of P2 is 0.11 eV lower than that of P1 and the band gap of P5 is 0.22 eV lower than that of P3. The decreases in the band gaps in the above-mentioned two polymers cases are due to the hexyl effect: there is interaction between the hexyl and the double bond in the conjugated chain. The decrease (0.22 eV) in the band gap of P5 is larger than the decrease (0.11 eV) that of P2. This difference is expected to originate from the fact that the ethenyl double bond and the thiophene double bond are affected by the hexyl in the former and later cases, respectively.

(B) *Ethenyl effect*

The band gap of P3 is 0.31 eV lower than that of P1. The difference in band gap between these two polymers is due to the difference between the π bond chain in the two systems: the conjugated chain consists of thiophene and ethenyl in the case of P3 and the chain consists of only thiophene in the case of P1. The weak bond alternation in P3 contributes to the decreases in band gap.

(C) *Extension of the π bond network*

The band gap of P4 is 0.82 eV lower than that of P1. In the case of P4, its HOMO and LUMO have amplitudes not only in thiophene but also in the benzene ring. This extension of the π bond network in P4 is the origin of the decreases in band gap.

As mentioned above, we discuss the three mechanisms underlying the band gap decreases in polythiophene derivative. These findings are helpful in the design of new derivatives having low band gaps. Actually, we predict that P5 has a low band gap (1.39 eV) due to the ethenyl and hexyl effects.

4. Chapter 4

4.1 Summary

We successfully calculate the band gap of polythiophene derivatives. We have carried out hybrid-DFT calculations for finite-size of polythiophene derivatives and estimate the band gaps of the infinite-length of polythiophene derivatives using an extrapolation scheme. The calculated band gaps of polythiophene (P1), P3HT (P2), poly(2-ethenylthiophene) (P3), and PITN (P4) are close to the experimental values. The cal-

culated band gaps of polythiophene derivatives studied in this paper are 1.10 - 1.81 eV; therefore, we have demonstrated that the band gaps can be controlled using suitable of polythiophene derivatives.

We clarify the mechanisms of the band gap decreases by analyzing the HOMO and LUMO as summarized in Sect. *3.6*. These findings are expected to be useful for band gap design. In particular, we find that the attachment of the hexyl decreases the band gap. With the correspond to this mechanism, we design poly(2-ethenyl-3-hexylthiophene) (P5). We estimate that the band gap of poly(2-ethenyl-3-hexylthiophene) (P5) has low band gap (1.39 eV).

4.2 Future Scope

In this study, we successfully predict the band gaps of polythiophene derivatives. We also clarify the mechanism the decreases of band gaps. Therefore, the low band gap of conjugated polymers can be designed.

However, for OSC besides the low band gap of conjugated polymers, we also need to achieve the low HOMO energy level. The HOMO energy level is associated to V_{oc} as shown in Eq. 2. The V_{oc} contributes to charge transfer. Therefore, to control the HOMO energy level, we need to design a push and pull units that allow internal charge transfer process along the conjugated chain.[15)] These push pull units can be designed through the donor-acceptor(D/A) copolymers. D/A conjugated polymers consist of electron rich conjugated polymers and electron acceptor conjugated polymers as acceptors.

For furhter study, based on the band gap calculations and the mechanism of band gap decreases in polythiophene derivatives, we would like to design low band gaps polymers and the low HOMO energy level using combination of donor/acceptor (D/A) copolymer. These D/A copolymer gives future hope to control the band gap of conjugated polymers, and finally we can find the suitable conjugated polymers for OSC application.

References

1) T. A. Skotheim, R. Lelsenbaumer, and J. R. Reynolds, *Handbook of Conducting Polymers*, (Marcel Dekker, New York, 1998) 3th ed., p. 13-3.
2) H. S. Nalwa, *Handbook of Organic Conductive Molecules and Polymers*, (Wiley, Chichester, UK, 1997) Vol. 3, p. 87.
3) I. F. Perepichka and D. F. Perepichka, *Handbook of Thiophene-based Materials*, (Wiley, Chichester, U. K., 2009) 1st ed., p. 366.
4) T. C. Chung, J. H. Kaufman, A. J. Heegar, F. Wudl, Phys.Rev. B **30**, 702 (1984).
5) H. S. Nalwa, *Handbook of Advanced Electronic and Photonic Materials and Devices*, (Academic Press, San Diego, CA , 2001) Vol. 8, p. 266.
6) N. S. Sariciftci, D. Braun, C. Zhang, V. I. Srdanov, A. J. Heeger, G. Stucky and F. Wudl, Appl. Phys. Lett. **62**, 585 (1993).
7) C. J. Brabec, N. S. Sariciftci, and J. C. Hummelen, Adv. Func. Mater, **11**, 1 (2001).
8) H. Hoppe and N.S. Sariciftci, J. Mater. Ress., **19**, 1924 (2004).
9) S. Gunes, H. Neugebauer, and N. S. Sariciftci, Chem. Rev., **107**, 1324 2007.
10) R. Kroon, M.Lenes, J.C. Hummelen, P. W. M. Blom and B.D. Boer, Polymer Reviews, **48**, 531 (2008).
11) M. A. Green, K. Emery, Y. Hishikawa, W. Warta and E. D. Dunlop, Prog. Photovolt: Res. Appl., **22**, 1 (2014).
12) R.M. Martin,*Electronic Structure Basic Theory and Practical Methods*, (Cambridge University Press, Cambridge, UK, 2004) 1st ed., p. 53, 119, 152.
13) F. Jensen, *Introduction to Computational Chemistry*, (Wiley, UK, 2001) 1st ed., p.150.
14) S. Yang, P. Olishevski, and M. Kertesz, Synth. Met. **141**, 171 (2004).
15) I. McCulloch, R. S. Ashraf, L. Biniek, H. Bronstein, C. Combe, J.E. Donaghey, D.I.James, C.B. Nielsen, B.C. Schroeder, and W. Zhang, Account Chem Res., **45**, 714 (2014).

平成 26 年　8　月 7　日

学位論文審査報告書（甲）

1．学位論文題目（外国語の場合は和訳を付けること。）

First-Principles Calculations of Polythiophene Derivatives

(ポリチオフェン誘導体の第一原理計算)

2．論文提出者　(1) 所　　属　数物科学　　専攻

(2) 氏　　名　Patricia Lubis（ぱとりしあ るびす）

3．審査結果の要旨（600～650 字）

7 月 17 日に主査、副査が参加して予備審査を行い、8 月 6 日に学位論文公聴会を行った。公聴会の直後に、主査と副査 4 名が協議し、合格と判断した。エネルギー問題解決が重要な課題となっている今日、新しい太陽電池デバイスとして、有機太陽電池が注目されている。ポリチオフェン誘導体は、有機太陽電池における電子供与体材料として重要であるが、エネルギー変換効率の向上のため、バンドギャップの小さな誘導体の探索が必要である。本研究では、混合密度汎関数理論に基づく計算により、有限長のオリゴマーのバンドギャップ値を見積もり、その値から外挿公式を用いて、無限長ポリマーのバンドギャップ値を求めた。得られたバンドギャップ値は、実験値と 0.2eV の誤差内で一致した。このことにより、計算の信頼性を確かめた。また、計算で得られた波動関数の解析を行う事により、誘導体におけるバンドギャップ低下のメカニズムを明らかにした。とくに、ヘキシル基がチオフェンと化学結合を形成すると、ヘキシル基と共役鎖が相互作用する事により、バンドギャップが、低下する事を明らかにした。このメカニズム解明に基づいて、poly(2-ethenylthiophene)にヘキシル基を結合させると、バンドギャップ（1.39eV）の小さなポリマーが得られる事を理論的に予言した。本研究は、今後バンドギャップの小さなポリチオフェン誘導体の探索を行う際に、有用な設計指針を与えており、合格と結論する。

4．審査結果　(1) 判　　定（いずれかに○印）　合　格　・　不合格

(2) 授与学位　博　士（理学）