Intraspecific Sequence Variation in Chloroplast DNA of Primula cuneifolia Ledeb.(Primulaceae)

メタデータ	言語: English 出版者: 公開日: 2019-10-03 キーワード (Ja): キーワード (En): 作成者: Fujii, Noriyuki, Ueda, Kunihiko, Watano, Yasuyuki, Shimizu, Tatemi, 藤井, 紀行, 植田, 邦彦, 綿野, 泰行, 清水, 建美 メールアドレス: 所属:
URL	https://doi.org/10.24517/00055598

This work is licensed under a Creative Commons Attribution-NonCommercial-ShareAlike 3.0 International License.

J. Phytogeogr. & Taxon.
43 : 15-24, 1995

Noriyuki Fujii*, Kunihiko Ueda**, Yasuyuki Watano** and Tatemi Shimizu** : Intraspecific Sequence Variation in Chloroplast DNA of *Primula cuneifolia* Ledeb. (Primulaceae)

藤井紀行*・植田邦彦**・綿野泰行**・清水建美**：エゾコザクラ(広義)の葉緑体DNAにおける種内変異

Abstract

We analyzed intraspecific variation of *Primula cuneifolia* Ledeb. using the nucleotide sequence of the intergenic spacer between the *trnL* (UAA) 3'exon and *trnF* (GAA) of the chroloprast DNA. The length of the sequence varied from 371 to 409 bp. In twelve populations of the species, 7 bp nucleotide substitutions and two gaps (insertions/deletions) were detected, and the intraspecific genetic divergence ranged from 0.0 to 1.9%. Six distinct cpDNA genotypes were recognized in *P. cuneifolia* and a part of them were not consistent with the traditional classification. The most parsimonious trees show that the cpDNA genotypes in the populations from the central Honshu, Japan were differentiated from a common ancestral genome.

Key words: chloroplast DNA, intergenic spacer, intraspecific variation, nucleotide sequence analysis, *Primula cuneifolia*.

Intraspecific chloroplast DNA (cpDNA) variations, observed from restriction fragment length polymorphisms (RFLPs), have now been widely used to analyze various evolutionary process of plant species. It has provided information regarding the domestication of crop taxa, multiple origins of polyploids, introgression among plant populations, and so on (cf. Soltis *et al.* 1992a; Shimizu 1993). For example, Kim *et al.* (1992) examined RFLPs for 51 populations of seven species in the genus *Krigia*. They found a total of 1,100 restriction sites and, at the intraspecific level, 46 of them were polymorphic. Then, they discussed the origins of polyploids of *Krigia* species. Vaillancourt and Weeden (1992) identified 21 independent cpDNA polymorphism in a cultivated plant, *Vigna unguiculata* using restriction sites analysis.

Intraspecific cpDNA variations using nucleotide sequence analysis have not often been reported, however, comparing with RFLPs analyses. According to the development of polymerase chain reaction (PCR) techniques, the method of sequence analysis has become simpler and more rapid, and it is possible to detect target sequences by smaller amount of plant material than RFLPs analyses. It has generally been known that noncoding regions display higher frequency of mutations than coding regions. Taberlet *et al.* (1991) documented that nucleotide sequence analysis of three non-coding regions between the *trnT* (UGU) and *trnF* (GAA) of cpDNA had possibility to detect intraspecific variations. Gielly and Taberlet (1994a) detected the intraspecific variation in *Gentiana burseri* Lapeyr. in the intergenic spacer between the *trnL* (UAA) and *trnF* (GAA), a part of the above mentioned region.

Primula cuneifolia Ledeb., an alpine meadow plant in Japan, occurs widely in the North Pacific coastal area from the Japanese Archipelago eastwards to southwest Alaska. Classification of

*Graduate School of Natural Science and Technology, Kanazawa University, Kanazawa 920-11, Japan 〒920-11 金沢市角間町金沢大学自然科学研究科生命科学専攻

**Department of Biology, Faculty of Science, Kanazawa University, Kanazawa 920-11, Japan 〒920-11 金沢市角間町金沢大学理学部生物

the intraspecific taxa of the species has been much confused.

Hultén (1930) recognized Japanese *P. hakusanensis* Franch. and *P. heterodonta* Franch. as well as *P. cuneifolia* with no intraspecific taxon. Later, he recognized two subspecies, sspp. *cuneifolia* and *saxifragifolia* (Lehm.) W.W. Smith et Forrest (Hulén 1968). The latter is distributed in the Aleutians, coastal Alaska, Cost Mountains and British Columbia, the type locality of which is Unalaska Island of the Aleutians. Smith and Fletcher (1948) recognized four subspecies, sspp. *cuneifolia, hakusanensis* (Franch.) W.W. Smith et Forrest (1928), *heterodonta* (Franch.) W.W. Smith and Forrest (1928) and *saxifragifolia* in their extensive revision of the genus. Fedorov (1967) did not accept any intraspecific taxa in the species at all.

Japanese botanists almost always have not referred to ssp. *saxifragifolia*. Hara (1948) recognized four varieties, *typica* (var. *cuneifolia* in the present code), *hakusanensis* (Franch.) Makino, *heterodonta* (Franch.) Makino and *tanigawaensis* Tatew. According to him, var. typica occurs in Hokkaido, the Kuriles, Sakhalin, E. Asia and Alaska. Kitamura *et al.* (1958) recognized sspp. *hakusanensis*, *cuneifolia* and *hetrodonta* in the species in Japan. As the distribution area of ssp. *cuneifolia*, they listed Hokkaido, the Kuriles, Sakhalin, shore of sea of Okhotsk, the Aleutians and Alaska. Ohwi (1953, 1978) accepted only two varieties; var. *cuneifolia* which occurs in Hokkaido, the Kuriles, Sakhalin, shores of sea of Okhotsk, the Aleutians and Alaska, and var. *hakusanensis*, to which vars. *heterodonta* and *tanigawaensis* were belonged. Yamazaki (1981) and Shimizu (1982) referred to the distribution area of var. *cuneifolia* as Japan, the Kuriles, Sakhalin, E. Siberia, Kamchatka and Alaska. Later, Yamazaki (1993) added the Aleutians to the distribution area of var. *cuneifolia*, but omitted Alaska.

Miyabe and Tatewaki (1936) described the population of Mt. Tanigawa in central Honshu as *P. cuneifolia* var. *tanigawaensis*. However, this variety has generally been treated as a synonym of *P. cuneifolia* var. *hakusanensis*.

Hence the recognition of intraspecific taxa in *P. cuneifolia* has variously been changed. We will treat, therefore, four intraspecific taxa as entities of *P. cuneifolia*: *cuneifolia, heterodonta, hakusanensis* and *saxifragifolia*, for the convenience sake, in the present paper. Then, we identified them based on the size of plant body and corolla, the number of flowers and the shape of teeth of leaf blade.

The present paper aims to examine the utility of nucleotide sequence analysis of intergenic spacer of cpDNA for intraspecific entities of *P. cuneifolia*.

Materials and Methods

Twelve populations of *Primula cuneifolia* and three outgroup taxa were collected for molecular phylogenetic analysis (Table 1; Fig. 1). They are *P. nipponica* Yatabe belonging to subgen. *Auriculastrum* Schott ex Fedorov sect. *Cuneifolia* Balf. to which *P. cuneifolia* also belongs, and *P. modesta* Bisset et Moore var. *matsumurae* (Petitm.) Takeda and *P. sorachiana* Miyabe et Tatewaki (subgen. *Aleuritia* sect. *Aleuritia*) (Yamazaki 1993). Five plants were collected from each population with a few exceptions (Table 1). In order to check the variations among populations in a single area and within a population, 32 plants of the entity *hakusanensis* were collected from several sites in Mts. Hakusan (Table 1).

Total DNA was isolated either from fresh leaves (stored at −80° C) or leaf materials that were dried by silica gel, following modification of CTAB method as described by Doyle and Dickson (1987). The intergenic spacer between the *trnL* (UAA) 3'exon and *trnF* (GAA) of cpDNA was amplified by PCR using the primers designed by Taberlet *et al.* (1991). The primer "e" of them was designed for the end of *trnL*, and "f" for the middle of *trnF*. The PCR products excised from agarose gel were purified by the GENECLEAN II Kit (BIO 101). The segments were sequenced manually by the dideoxy chain termination method using the CircumVent Sequencing Kit (New England Biolabs). Multiple alignment of the sequences of the intergenic spacer was obtained manually using the DNASIS-Mac (Hitachi Software Engineering). Insertions/deletions (indels) were generally placed so as to increase the number of matching

Table 1. Collections examined for variation of the intergenic spacer between *trnL* (UAA) 3' exon and *trnF* (GAA) of cpDNA

Population and taxon	Collection data and voucher	Collector	Abbreviation	Nos. of plants*
Primula cuneifolia				
1. entity *saxifragifolia*	Unalaska Island, Alt. 210 m, the Aleutian Islands, Alaska, U. S. A., KANA 175623	Y. Watanabe	UNA	2
2. entity *cuneifolia*	Mt. Rausu, Alt. 1500 m, the Shiretoko Peninsula Hokkaido Pref., Japan, KANA 175621	N. Fujii	RAU	5
3.	Takanegahara, Alt. 1800 m, Daisetsu Mts., Hokkaido Pref., Japan, KANA 175621	N. Fujii	DAI	5
4.	Mt. Kamihorokamettoku, Alt. 1900 m, Tokachi Mts., Hokkaido Pref., Japan	T. Sato	KAM	5
5.	Mt. Poroshiri, Alt. 1800 m, the Hidaka Range, Hokkaido Pref., Japan, KANA 175613	N. Fujii	POR	5
6. entity *heterodonta*	Mt. Iwaki, Alt. 1500 m, Aomori Pref., Tohoku district, Honshu, Japan, KANA 175622	N. Fujii	IWA	5
7. entity *hakusanensis*	Mt. Kitamata-Mt. Onishi, Alt. 1900 m, The Iide Mts., Yamagata Pref., Honshu, Japan, KANA 175614	N. Fujii	IID	5
8.	Mt. Echigokoma, Alt. 1900 m, Niigata Pref. central Honshu, Japan, KANA 175610	N. Fujii	ECH	5
9.	Mt. Asahi, Alt. 1900 m, Tanigawa Mts., Gunma Pref., central Honshu, Japan	N. Fujii	TAN	5
10.	Mt. Myoko, Alt. 2000 m, Niigata Pref., central Honshu, Japan	S. Shindo	MYO	5
11.	Mt. Shirouma, Alt. 2800 m, Nagano Pref., central Honshu, Japan, KANA 175619	N. Fujii	SHI	5
12.	Mt. Hakusan, Alt. 2400 m, Ishikawa Pref., central Honshu, Japan, KANA 175620	N. Fujii	HAK	32
Outgroups				
13. *P. nipponica*	Mt. Gassan, Alt. 1800 m, Yamagata Pref., Tohoku district, Japan, KANA 175616	N. Fujii	NIP	1
14. *P. modesta* var. *matsumurae*	Rebun Island, Alt. 100 m, Hokkaido Pref., Japan	N. Fujii	MOD	1
15. *P. sorachiana*	along the Saru River, Alt.700 m, the Hidaka Range, Hokkaido Pref., Japan, KANA 175609	N. Fujii	SOR	1

*The numbers of plants collected from each population.

nucleotides in a sequence position.

Phylogenetic relationships among the populations of *P. cuneifolia* were inferred by parsimony method using PAUP 3.1.1 (Swofford 1993), maximum likelihood method using DNAML in PHYLIP 3.5 c (Felsenstein 1993) and neighbor joining method using ClustalV (Higgins 1991). In using parsimony method, the strict consensus tree was depicted with bootstrap confidence values based on 1000 times replications using a branch and bound search. The different mutational events (nucleotide substitutions and indels) were coded in a matrix as unordered characters (Table 2). Indels have generally been treated as missing data, however, Gielly and Taberlet (1994a) and Saitou and Ueda (1994) have used each of them as a single character in phylogenetic analysis of closely related taxa, because it is considered that parallel evolutional characters are a few in the intraspecific level. In the present study, an indel of more than one sequence was treated as a single character as that was created by one event, except for the gaps 2 and 6 (Table 2). When we analyzed the data using the maximum likelihood method (Global option and 10 times Jumble option) and neighbor joining method (with confidence values using bootstrap 1000 times resamplings), we adopted substitution data only.

Result

We determined the sequence of the intergenic spacer between the *trnL* (UAA) 3'exon and *trnF* (GAA) of cpDNA in all the accessions, the length of which varied from 371 to 409 bp including 20 bp of the coding region of *trnF*. Because the primer "e" has been designed in adjacent region of *trnL*, we could not obtain the complete range

Table 2. Accessions sequenced and the six gaps (insertions/deletions) in the intergenic spacer between *trnL* (UAA) 3' exon and *trnF* (GAA) of cpDNA, with sites numbers by base position within the intergenic region to be vertically read

a

																																									G	G	G	G	G	G
											1	1	1	1	1	1	1	1	1	1	1	1	2	2	2	2	2	2	2	2	2	2	3	3	3	3	3	3	3	3	A	A	A	A	A	A
	2	2	4	5	5	6	6	7	9	9	1	1	5	6	6	7	7	7	8	8	8	8	0	0	1	4	5	6	6	7	8	8	0	0	1	2	2	2	2	4	P	P	P	P	P	P
	2	4	5	4	8	2	3	7	3	6	5	6	8	4	9	2	4	6	0	4	5	7	1	4	6	3	7	0	3	1	0	2	0	3	9	1	2	6	7	0	1	2	3	4	5	6
UNA	C	A	A	G	T	C	G	A	T	A	G	C	A	A	C	G	G	G	G	T	T	G	A	C	T	A	T	G	G	T	T	T	G	T	T	G	G	T	A	G	0	0	0	0	0	0
RAU	*	*	*	*	*	*	*	*	*	*	*	*	*	*	*	*	*	*	*	*	*	*	*	*	*	*	*	*	*	*	*	*	*	*	*	*	*	*	*	*	*	*	*	*	*	*
DAI	*	*	*	*	*	*	T	*	*	*	*	*	*	*	*	*	*	*	*	*	*	*	G	*	*	*	*	*	*	*	*	*	*	*	*	*	*	*	*	*	*	*	*	*	*	1
KAM	*	*	*	*	*	*	T	*	*	*	*	*	*	*	*	*	*	*	*	*	*	*	G	*	*	*	*	*	*	*	*	*	*	*	*	*	*	*	*	*	*	*	*	*	*	1
POR	*	*	*	*	*	*	T	*	*	*	*	*	*	*	*	*	*	*	*	*	*	*	G	*	*	*	*	*	*	*	*	*	*	*	*	*	*	*	*	*	*	*	*	*	*	1
IWA	*	*	*	*	*	*	T	*	*	*	*	*	*	*	*	*	*	*	*	*	*	*	G	*	*	*	*	*	*	*	*	*	*	*	*	*	*	*	*	*	*	*	*	*	*	1
IID	*	*	*	*	*	T	T	*	*	*	*	*	*	*	*	*	T	A	*	*	*	G	*	*	*	*	*	*	*	*	*	*	*	*	*	*	*	*	A	*	*	*	*	*	1
ECH	*	*	*	*	*	*	T	*	*	*	*	*	*	*	*	*	*	*	*	*	*	*	G	*	*	*	*	*	*	*	*	*	*	*	*	*	*	*	*	A	*	*	*	*	*	1
TAN	*	*	*	*	*	*	T	*	*	*	*	*	*	*	*	*	*	*	*	*	*	*	G	*	*	*	*	*	*	*	*	*	*	*	*	*	*	*	*	A	*	*	*	*	*	1
MYO	*	*	*	*	*	*	T	*	*	*	*	*	*	*	*	*	*	*	*	*	*	*	G	*	*	*	*	*	*	*	*	*	*	*	*	*	*	*	*	A	*	*	*	*	*	1
SIR	*	*	*	*	*	*	T	*	*	*	*	*	*	*	*	*	*	*	*	*	*	*	G	*	*	*	*	*	*	*	*	*	*	*	*	*	*	*	*	A	*	1	*	*	*	1
HAK	*	*	*	*	*	*	T	*	*	*	T	*	*	*	*	*	*	*	*	*	*	*	G	*	*	*	*	*	*	*	*	*	*	*	*	*	*	*	*	A	*	1	*	*	*	1
NIP	*	*	*	*	*	*	T	*	*	*	*	*	*	*	*	*	*	*	*	*	*	*	G	*	C	*	*	*	*	*	*	*	*	*	*	*	A	*	*	*	*	*	*	*	*	2
MOD	A	G	C	A	C	*	N	C	C	G	*	T	C	G	T	A	A	*	*	C	G	A	G	T	C	C	A	T	A	G	C	G	A	A	G	T	*	C	C	*	*	2	1	1	1	3
SOR	A	G	C	A	C	*	N	C	C	G	*	T	C	G	T	A	A	*	*	C	G	A	G	T	C	C	A	T	A	G	C	G	A	A	G	T	*	C	C	*	1	2	1	1	1	3

b

```
              1    1
     2    7   1    6
UNA  TCCCT-----AACTA
RAU  *****-----*****
DAI  *****-----*****
KAM  *****-----*****
POR  *****-----*****
IWA  *****-----*****
IID  *****-----*****
ECH  *****-----*****
TAN  *****-----*****
MYO  *****-----*****
SIR  *****-----*****
HAK  *****-----*****
NIP  *****-----*****
MOD  *****-----*****
SOR  *****TCCCT*****
```

Gap 1

```
     2    3             4    5
     6    1             5    0
UNA  ATCTA---------------TATCT
RAU  *****---------------*****
DAI  *****---------------*****
KAM  *****---------------*****
POR  *****---------------*****
IWA  *****---------------*****
IID  *****---------------*****
ECH  *****---------------*****
TAN  *****---------------*****
MYO  *****---------------*****
SIR  *****TACTA----------*****
HAK  *****TACTA----------*****
NIP  *****---------------*****
MOD  **A*G-----CTATTTATACTC*****
SOR  **A*G-----CTATTTATACTC*****
```

Gap 2

```
     1    1         1    1
     3    3         4    5
     1    6         6    1
UNA  CTCTTATTATCAGTTTTGCGG
RAU  *********************
DAI  *********************
KAM  *********************
POR  *********************
IWA  *********************
IID  *********************
ECH  *********************
TAN  *********************
MYO  *********************
SIR  *********************
HAK  *****************T***
NIP  *********************
MOD  ******----------**T**
SOR  ******----------**T**
```

Gap 3

```
     2    2 3    2
     2    2 3    3
     3    8 0    5
UNA  CCATA---TTATT
RAU  *****---*****
DAI  *****---*****
KAM  *****---*****
POR  *****---*****
IWA  *****---*****
IID  *****---*****
ECH  *****---*****
TAN  *****---*****
MYO  *****---*****
SIR  *****---*****
HAK  *****---*****
NIP  *****---*****
MOD  *****TCC*****
SOR  *****TCC*****
```

Gap 4

```
     2    2    2
     6    6    7
     3    8    3
UNA  TTTTT-GAAAA
RAU  *****-*****
DAI  *****-*****
KAM  *****-*****
POR  *****-*****
IWA  *****-*****
IID  *****-*****
ECH  *****-*****
TAN  *****-*****
MYO  *****-*****
SIR  *****-*****
HAK  *****-*****
NIP  *****-*****
MOD  *****T*****
SOR  *****T*****
```

Gap 5

```
     3    3                 33                 33    3    3
     3    4                 66                 88    8    9
     8    3                 12                 01    6    1
UNA  ACTCAATTTATTGACATAGACTCAATTTATTGACATAGACTCA------CTAGT
RAU  *******************************************------*****
DAI  ***********************--------------------------*****
KAM  ***********************--------------------------*****
POR  ***********************--------------------------*****
IWA  ***********************--------------------------*****
IID  ***********************--------------------------*****
ECH  ***********************--------------------------*****
TAN  ***********************--------------------------*****
MYO  ***********************--------------------------*****
SIR  ***********************--------------------------*****
HAK  *****************T*****--------------------------*****
NIP  *****--------------------------------------------*****
MOD  **A**--------------------------------------AGTCGT*****
SOR  **A**--------------------------------------AGTCGT*****
```

Gap 6

a, informative nucleotide sites (invariant sites removed) and the gaps coded as unordered multistate characters.
b, the six gaps (insertions/deletions) detected in the intergenic spacer. Each gap was named Gap 1, 2, 3, 4, 5, and 6. The complete set of infomative nucleotides and gap characters is given for the population of Unalaska Island. An asterisk indicates that the same nucleotide and gap is present. See Table 1 for abbreviations.

of the spacer. The length after multiple alignment of the sequences resulted in 441 bp, and totally, 40 bp nucleotide substitutions were detected (Table 2). Within *Primula cuneifolia*, 7 bp site changes and two indels (total 24 bp) were detected (Gaps 2 and 6 in Table 2). The pairwise sequence comparisons among the all accessions indicated that the sequence divergence was ranged from 0.0 to 11.5%, and the intraspecific divergence of *P. cuneifolia* was ranged from 0.0 to 1.9% (data not shown). The intrapopulational variation was never detected in all the populations including 32 plants collected from Mts. Hakusan.

Six distinct cpDNA genotypes could be recognized in *P. cuneifolia* (Figs. 1 and 3, Table 2). The populations of Unalaska Island (The Aleutians) and Mt. Rausu (Hokkaido) were revealed to be same sequence and were named type A here. The populations of Mts. Daisetsu, Mt. Kami-horokamettoku and Mt. Poroshiri, Hokkaido, and Mt. Iwaki, northern Honshu showed same sequence (type B). The population of Mt. Iide, northern Honshu was unique in the sequence (type C). The populations from Mt. Echigokoma, Mts. Tanigawa and Mt. Myoko, central Honshu have same sequence and were called type D. The populations from Mt. Shirouma and Mt. Hakusan are unique, and were named types E and F, respectively. *P. nipponica*, of the same section as *P. cuneifolia*, had similar sequences to the present material. *P. modesta* var. *matsumurae* and *P. sorachiana* were distinguished from type A by 33 bp nucleotide substitutions and five indels.

Most parsimonious, maximum likelihood and

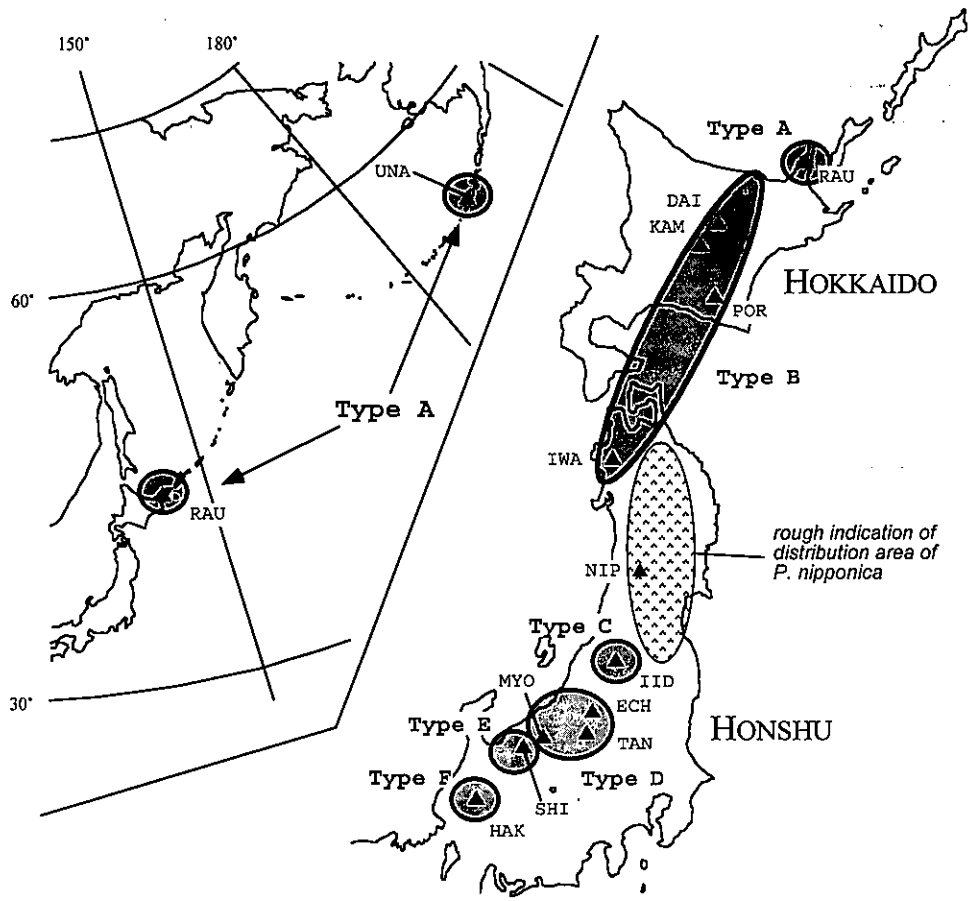

Fig. 1. Collection sites (triangles) of *Primula cuneifolia* and *P. nipponica*. See Table 1 for details. The six distinct cpDNA genotypes are also indicated.

neighbor joining trees were constructed only by nucleotide site change data for six cpDNA genotypes of *P. cuneifolia* and the outgroup species (Fig. 2). Though their topologies were partially different from one another, all the trees show that the cpDNA genotypes from populations of *P. cuneifolia* constituted a single clade, and those from the populations of the entity *hakusanensis* of *P. cuneifolia* also constituted a single clade.

Nine most parsimonious trees were obtained from Wagner parsimony analysis. The trees required 49 steps and the consistency index was 1.0. The strict consensus tree of them is presented in Fig. 3. *P. cuneifolia* and *P. nipponica* are monophyletic in 100% probability against *P. modesta* var. *matsumurae* and *P. sorachiana*.

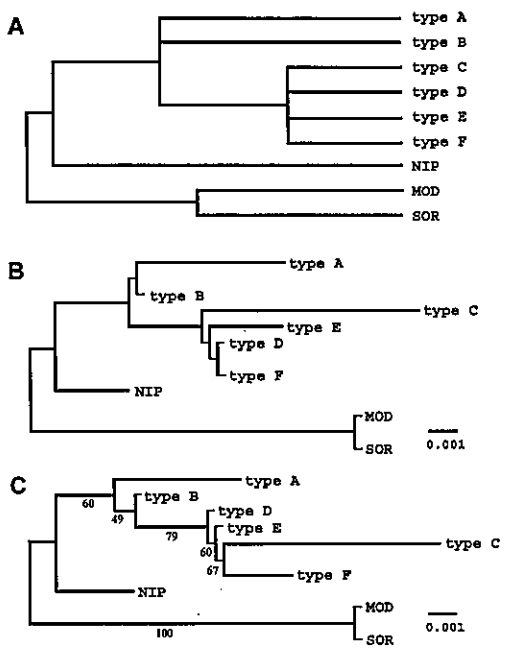

Fig. 2. Phylogenetic trees based on the sequence of the intergenic spacer, excluding gaps, among populations in *P. cuneifolia* with the outgroup species. A, Strict consensus tree of the 45 most parsimonious trees adopting a branch and bound search. B, Maximum likelihood tree. Fine lines indicate branches statistically not supported. They are depicted to be largely elongated but their real length is nearly zero for convenience sake. C, Neighbor joining tree. Fine lines represent zero branch length, and these branches are depicted to be largely elongated. Numbers along internode show the bootstrap probability indicated in percentage. See Table 1 for abbreviations.

The cpDNA genotypes from the populations of *P. cuneifolia* constituted a single clade in 71% probability, and a synapomorphic character is 1 bp nucleotide substitution (position 216). The genotypes from the populations of *P. cuneifolia* entity *hakusanensis* (types C–F) made a clade supported by 64% confidence value, and a synapomorphic character is 1 bp site change (position 340). The genotypes from the populations of Mt. Shirouma and Mt. Hakusan (types E and F) made a clade supported by a 61% confidence value, and the synapomorphic character is one gap (Gap 2).

Discussion

Intraspecific genetic divergence based on variations of sequences has seldom been reported. Gielly and Taberlet (1994a) reported intraspecific genetic divergence (proportion of mutational events that includes not only site changes but also indels) in the intergenic spacer, which was the same region as the present study, as 0.77% between *Gentiana burseri* sspp. *burseri* and *villarsii*. Baldwin (1993) has detected intraspecific variation from the internal transcribed spacer (ITS) region of the 18–26 S nuclear ribosomal DNA in *Calycadenia* species. ITS sequence divergences were found among populations of a species and they were up to 3.7%. On the other hand, RFLPs analyses have often been discussed for intraspecific variations. Soltis *et al.* (1992a) summarized the magnitude of intra/interspecific sequence divergence detected by analyses using restriction site variations (RFLPs) of cpDNA. *Heuchera grossulariifolia* showed the widest variation range of genetic variations between 0.000 to 0.299%, which did not include any intraspecific taxa other than mere polyploids. Maximum variations for interspecific divergence were seen in *Lycopersicon* from 0.0 to 0.7%.

The pairwise comparisons among all the present materials indicated the interspecific divergence of the spacer ranging from 0.3 to 11.5%, and intraspecific divergence in *P. cuneifolia* ranging from 0.0 to 1.9%. Therefore, the genetic divergence among the present materials is much higher than the cases cited above, which might mean that they had diverged from one another rather long ago.

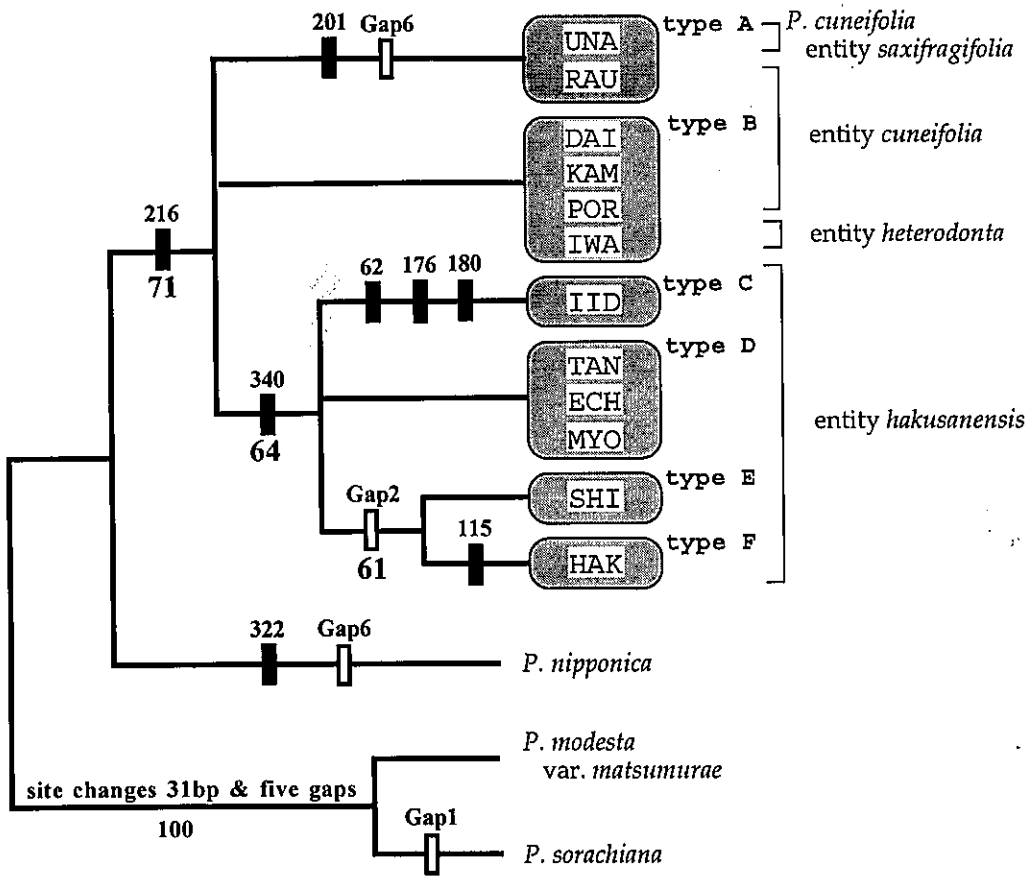

Fig. 3. Strict consensus tree of the nine most parsimonious trees based on the gaps as well as site changes in intergenic spacer between *trnL* (UAA) 3'exon and *trnF* (GAA) of cpDNA among populations of *P. cuneifolia* and the outgroup species. See Table 1 for abbreviations. Numbers below branch are bootstrap values in percentage. Solid bars represent site changes with nucleotide position. Open bars represent gap (insertions/deletions).

Other than the base substitutions, six indels were detected in this study (Table 2). In the nucleotide sequence analysis of noncoding regions in closely related taxa, it has been known that the mutational events of indels relatively highly occur (Golenberg *et al.* 1993; Gielly and Taberlet 1994b). We obtained similar results in this intergenic spacer of *Primula* species. On the other hand, we have to pay attention to treatment of indels throughout the course of molecular phylogenetic analyses. In the present study, we treated each of them as being created by a single event or being a combination of several such single events, respectively. Anyway, the topology resulted from analyses using site change data only (Fig. 2) and topology of maximum parsimonious analysis using both the data of site changes and indels (Fig. 3) showed fundamentally the same topology.

It is known that a gene tree may be incongruent with the species tree in the case of closely related taxa (Avise 1989; Doyle 1992; Page 1993). We could analyze only a single short range of cpDNA sequences in the present study so that we avoid to discuss the taxonomy of *P. cuneifolia* here. Nevertheless, it is noteworthy to point out that the geographic distribution of the six distinct cpDNA genotypes in *P. cuneifolia* has the following significant features.

With increasing latitude, the ranges of the genotypes are seemed to tend to increase in area (Fig. 1). The genotypes of the populations of Unalaska Island and Hokkaido (A and B) have wider distribution area, however, four genotypes

(C, D, E and F) were recognized only from a part of central Honshu, Japan (Fig. 3). This feature agrees with the distribution areas and/or pattern of entities of *P. cuneifolia* as mentioned above. Several studies illustrated that cpDNA genotypes frequently were geographically structured (Lavin *et al.* 1991, Brunsfeld *et al.* 1992). Soltis et al. (1992b) extensively studied that the cpDNA genotypes in three species, *Tolmiea menziesii*, *Tellima grandiflora* and *Tiarella trifoliata*, that have similar geographic distributions, were roughly distinguished northern and southern types, respectively. They discussed that glaciation might have played a major role in generation of the pattern of distribution of genotypes. In the present study, the cpDNA genotypes of *P. cuneifolia* also possessed geographic structure. It may represent the evolutionary history that isolation played a major role to yield many genotypes in the alpine to subalpine regions in central Honshu, where is the southernmost area of the species.

The most parsimonious tree illustrates that the genotypes C, D, E and F observed separately in central Honshu, which are referable to *P. cuneifolia* entity *hakusanensis*, diverged from a common ancestral genome (Figs. 2 and 3). It has been said that distribution areas of many plant species moved southwards in the glaciation epoch, and now they remain, as relicts, in the alpine region of central Honshu. Evolutionary history of *P. cuneifolia* entity *hakusanensis* is highly probably one of such cases.

Gielly and Taberlet (1994a) showed that *trnL* (UAA) intron sequences had phylogenetic utility at the generic level, and the intergenic spacer between the *trnL* and *trnF* had higher divergence than *trnL* intron. The intergenic spacer appeared to offer data for elucidating the relationship of intraspecific taxa.

Obtained gene trees were partially inconsistent with our identification based on their external morphology and traditional classification. For example, we identified the present materials from Unalaska Island as *P. cuneifolia* entity *saxifragifolia* (the specimens possess apparently short scapes and smaller flowers), the populations of the Hokkaido into entity *cuneifolia*, those of Mt. Iwaki to entity *heterodonta* and those from central Honshu as entity *hakusanensis* (Table 1, Fig. 1). However, the genotypes from the populations of Unalaska Island and Mt. Rausu in Hokkaido (Japan), and those from the populations of Hokkaido excluding Mt. Rausu and of Mt. Iwaki were identical, respectively (Fig. 1). *P. cuneifolia* entity *heterodonta* has been considered to be more closely related to *P. cuneifolia* entity *hakusanensis* judging from the morphologies rather than geographically related Hokkaido's taxon, entity *cuneifolia* (Ohwi 1972). It is contradictory to our present gene tree seen in Figs. 1, 2 and 3.

The plants of the genotypes C, D, E and F can be identified to entity *hakusanensis* and comprise monophyletic group totally. On the other hand, Miyabe and Tatewaki (1936) distinguished the plants from Mts. Tanigawa as *P. cuneifolia* var. *tanigawensis* Tatew. from *P. cuneifolia* var. *hakusanensis*, though that variety has generally been treated as a synonym of the latter in these decades. We showed that the differentiation in molecular level is facilitating in the population of *P. cuneifolia* entity *hakusanensis*. They are recommended to revise the taxonomy of the plants from central Honshu.

We express our sincere thanks to Dr. T. Terachi and Prof. K. Yamaguchi for their kind helps, and to Messrs. Y. Watanabe, T. Sato, N. Shirai and Ms. S. Shindo for provision of plant materials. The present study was supported in part by a Grant-in-Aid from the Ministry of Education, Science and Culture, Japan (06454030 to T.S.) and by the Joint Research Utilizing Science and Technology Potential in Region from the Science and Technology Agency, Japan (to T. S.).

References

Avise, J. C. 1989. Gene trees and organismal histories: A phylogenetic approach to population biology. Evolution **43**: 1192–1208.

Baldwin, B. G. 1993. Molecular phylogenetics of *Calycadenia* (Compositae) based on its sequences of nuclear ribosomal DNA: chromosomal and morphological evolution reexamined. Am. J. Bot. **80**: 222–238.

Brunsfeld, S. J., Soltis, D. E. and Soltis, P. S. 1992. Evolutionary patterns and processes in *Salix* sect. *Longifoliae*: Evidence from chloro-

plast DNA. Syst. Bot. **17**: 239-256.

Doyle, J. J. and Dickson, E. E. 1987. Preservation of plant samples for DNA restriction endonuclease analysis. Taxon **36**: 715-722.

Doyle, J. 1992. Gene trees and species trees: molecular systematics as one-character taxonomy. Syst. Bot. **17**: 144-163.

Fedorov, An.A. *Primula*. 1967. *In* Shishkin, B.K. and Bobrov, B.G. (eds.): Flora of the U.S.S.R. **18**: 86-151. Israel Program for Scientific Translations, Jerusalem. (originally in 1952)

Felsenstein, J. 1993. PHYLIP, (Phylogeny Inference Package) version 3.5, University of Washington, Seattle.

Gielly, L. and Taberlet, P. 1994a. The use of chloroplast DNA to resolve plant phylogenies: noncoding versus rbcL sequences. Mol. Biol. Evol. **11**: 769-777.

Gielly, L. and Taberlet, P. 1994b. Chloroplast DNA polymorphism at the intrageneric level: implications for the establishment of plant phylogenies. C. R. Acad. Sci. Life Sci. **317**: 685-692.

Golenberg, E. M., Clegg, M. T., Burbin, M. L., Doebley, J. and Ma, D. P. 1993. Evolution of a noncoding region of the chloroplast genome. Mol. Phylog. Evol. **2**: 52-64.

Hara, H. 1948. Enumeratio Spermatophytarum Japonicarum, Pars Prima. 300 pp. Iwanami, Tokyo.

Higgins, D. G. 1991. ClustalV. EMBL, Heidelberg.

Hultén, E. 1930. *Primula cuneifolia*. *In* Flora of Kamtchatka and the Adjacent Islands **4**: 48-50. Almqvist and Wiksells, Stockholm.

Hultén, E. 1968. *Primula*. *In* Flora of Alaska and Neighboring Territotories. pp. 737-742. Stanford Univ. Press, Stanford.

Kim, K., Jansen, R. K. and Turner, B. L. 1992. Evolutionary implications of intraspecific chloroplast DNA variation in dwarf dandelions (*Kirigia*; Asteraceae). Am. J. Bot. **79**: 708-715.

Kitamura, S., Murata, G. and Hori, M. 1958. Colored Illustrations of Herbaceous Plants of Japan Vol. I (Sympetalae), rev. ed. 297 pp. Hoikusha, Osaka.

Lavin, M., Mathews, S. and Hughes, C. 1991. Chloroplast DNA variation in *Gliricidia sepium* (Leguminosae): intraspecific phylogeny and tokogeny. Am. J. Bot. **78**: 1576-1585.

Miyabe, K. and Tatewaki, M. 1936. Contributions to the flora of northern Japan VII. Trans. Sapporo Nat. Hist. Soc. **14**: 181-192.

Ohwi, J. 1953. Flora of Japan. 1383 pp. Shibundo, Tokyo. (in Japanese)

Ohwi, J. 1978. Flora of Japan, rev. and enlarg. ed. 1584 pp. Shibundo, Tokyo. (in Japanese)

Page, R. D. M. 1993. Genes, organisms, and areas: The problem of multiple lineages. Syst. Biol. **42**: 77-84.

Saitou, N. and Ueda, S. 1994. Evolutionary rates of insertion and deletion in noncoding nucleotide sequences of Primates. Mol. Biol. Evol. **11**: 504-512.

Shimizu, T. 1982. The New Alpine Flora of Japan in Color vol. 1. 331 pp. Hoikusha, Osaka. (in Japanese)

Shimizu, T. 1993. Comments on the present situation of DNA systematics in higher plants. J. Plant Res. **106**: 67-74.

Smith, W.W. and Fletcher, H.R. 1948. The genus *Primula*: Sections *Cuneifolia*, *Floribundae*, *Parryi*, and *Auricula*. Trans. Roy. Soc. Edin. **91**: 631-686.

Soltis, D. E., Soltis, P. S. and Milligan, B. G. 1992a. Intraspecific chloroplast DNA variation: Systematics and phylogenetic implication. *In* Soltis, P. S. *et al.* (eds.): Molecular Systematics of Plants. pp. 117-150. Chapman and Hall, New York.

Soltis, D. E., Soltis, P. S., Kuzoff, R. K. and Tucker, T. L. 1992b. Geographic structuring of chloroplast DNA genotypes in *Tiarella trifoliata* (Saxifragaceae). Pl. Syst. Evol. **181**: 203-216.

Swofford, D. L. 1993. PAUP (Phylogenetic Analysis using Parsimony), version 3.1.1. Illinois Natural History Survey, Champaign.

Taberlet, P., Gielly, L., Pautou, G. and Bouvet, J. 1991. Universal primers for amplification of three non-coding regions of chroloplast DNA. Pl. Mol. Biol. **17**: 1105-1109.

Vaillancourt, R. E. and Weeden, N. F. 1992. Chloroplast DNA polymorphism suggests Nigerian center of domestication for the cowpea, *Vigna unguiculata* (Leguminosae). Am. J. Bot. **79**: 1194-1199.

Yamazaki, T. 1981. *Primula*. *In* Satake, Y., Ohwi, J., Kitamura, S., Watari, S. and Tominari, T.(eds.): Wild Flowers of Japan, Herbaceous plants (including dwarf subshrubs), pp. 21-24. Heibonsha, Tokyo. (in Japanese)

Yamazaki, T. 1993. *Primula*. *In* Iwatsuki, K., Yamazaki, T., Boufford, D.E. and Ohba, H. (eds.): Flora of Japan **3a**: 86-94. Kodansha, Tokyo.

摘　要

エゾコザクラ *Primula cuneifolia* は、日本からサハリン，千島，カムチャッカ半島，アリューシャン列島を経てアラスカ南部におよぶ，北太平洋沿岸部に分布するサクラソウ科サクラソウ属ハクサンコザクラ亜属ハクサンコザクラ節の植物である。日本では亜高山帯～高山帯の雪田群落を彩る高山植物の一つとして親しまれている。本種には多くの種内分類群が記載されているが，その取り扱いに関しては定説がなく，文献により様々である。日本自生の種類に関しての日本人研究者の見解をみると，ハクサンコザクラ（本州中部日本海側，およそ南は白山から北は飯豊連峰まで），青森県岩木山固有のミチノクコザクラ、北海道，千島列島のエゾコザクラ（狭義）の3分類群をそれぞれ変種と認める考えが多少優勢である。一方，アリューシャン列島からアラスカにかけての集団を *saxifragifolia*（変種，亜種または別種）として認める欧米の研究者もいるが，エゾコザクラ（狭義）の変異幅の内に入るものとする見解もある。これについての日本人研究者の言及は少ない。

本研究ではしたがって，以上の文献と形態観察(植物体と花冠の大きさ、鋸歯の形態、花の数）に基づき，本州中部山岳のものをハクサンコザクラ，岩木山のものをミチノクコザクラ，北海道のものをエゾコザクラ，アリューシャン列島のものを *saxifragifolia* と同定し，従うべき定説がないことを鑑みそれぞれを entity（ランクを与えずに型として分類群同様に扱う概念）として扱うこととした。

本研究では、エゾコザクラの12集団を用いて、葉緑体DNAの *trnL*（UAA）3'exon～*trnF*（GAA）の遺伝子間領域の塩基配列を決定し、その変異を解析した。またヒナザクラ（ハクサンコザクラ節）とレブンコザクラ(ユキワリソウ亜属ユキワリソウ節)、ソラチコザクラ（同）の3種を外群として用い、集団間の系統樹を最節約法，距離行列法と最尤法により構築した。それらの結果から以下のことが明らかとなった。

(1) エゾコザクラ群において7bpの塩基置換と2カ所の挿入／欠失が検出された。これに基づいて計算した種内の遺伝的多様性は0.0～1.9%であり、他の植物の葉緑体DNAにみられる種内変異と比べて遺伝的にかなり分化していた。

(2) 近縁な分類群における非翻訳領域の塩基配列の解析から、挿入／欠失がかなりの頻度で起こっていることが報告されている。今回用いたサクラソウ属植物においても6つの挿入／欠失が検出され、かなりの頻度で生じていることが分かった。

(3) 取り上げた領域においてエゾコザクラ群内に6種類の遺伝型（A～F）が認識された。緯度が高くなるにつれて各遺伝型の分布域が広くなる傾向が見られた。本州中部の狭い範囲に4型が認識されたのに対し、北海道、アリューシャン列島では広い範囲に同じ型が分布しているようである。本州中部の亜高山～高山では、かなりの隔離作用が働いたのであろう。多くの日本の高山植物は氷河期に南下してきた遺存種であると考えられてきたが、この本州中部の集団はそのような進化の歴史を現しているのかもしれない。また，エゾコザクラ群は全体として単系統であり，さらにソラチコザクラとレブンコザクラに対しては同節のヒナザクラと単系統であった。

(4) 系統解析から、C～Fの4型の単系統性が示された。これらは形態的にはハクサンコザクラに同定できるものであり，共通の祖先から遺伝的に分化してきたことを示唆している。

(5) 本研究では外部形態から、アリューシャン列島ウナラスカ島の集団を *saxifragifolia*，北海道の集団をエゾコザクラ（狭義），岩木山の集団をミチノクコザクラと同定した。しかし、ウナラスカ島と北海道の羅臼岳、他の北海道の集団と青森県岩木山の集団は，それぞれまったく同じDNA配列であった。ミチノクコザクラはハクサンコザクラに近いとする考えがあるが，再検討する必要がある。

ハクサンコザクラ集団内において、分子レベルでの分化がみられた。かつて谷川岳の集団が変種タニガワコザクラとして記載されたことがあるように，外部形態的にも分化が進んでいることも考えられ，各遺伝型の詳細な外部形態の観察，解析が待たれる。

(6) 以上のように，葉緑体DNAの *trnL*（UAA）3'exon～*trnF*（GAA）の遺伝子間領域は、種内分類群間の類縁関係を再評価するのに有効な情報を持つようである。

(received May 1, 1995; accepted November 18, 1995)