Automation of chamfering by an industrial robot; for the case of hole on free-curved surface

メタデータ	言語: English 出版者: 公開日: 2017-10-03 キーワード (Ja): キーワード (En): 作成者: Asakawa, Naoki, Toda, Kenji, Takeuchi, Yoshimi, 浅川, 直紀 メールアドレス: 所属:
URL	https://doi.org/10.24517/00007490

This work is licensed under a Creative Commons Attribution-NonCommercial-ShareAlike 3.0 International License.

Automation of Chamfering by an Industrial Robot; for the Case of Hole on a Free Curved Surface

Naoki Asakawa[a,*], Kenji Toda[b] and Yoshimi Takeuchi[c]

[a]*Department. of Human and Mechanical Systems Engineering, Faculty of Engineering, Kanazawa University, 2-40-20, Kodatsuno, Kanazawa-shi, Ishikawa, 920-8667, Japan*

[b]*Mitsubishi Heavy Industry Ltd., 130, Rokujizou, Ritto-cho, Kurita-gun, Shiga, 520-3080, Japan*

[c]*Department. of Mechanical Engineering and Intelligent Systems, University of Electro-Communications, 1-4-1 Chofugaoka, Chofu-shi, Tokyo, 182-8585, Japan*

Abstract:

The study deals with the automatic chamfering for the case of hole on a free curved surface on the basis of CAD data, using an industrial robot. As a chamfering tool, a rotary-bar driven by an electric motor is mounted to the arm of the robot having six degrees of freedom in order to give an arbitrary position and attitude to the tool. The robot control command converted from the chamfering path is transmitted directly to the robot. From the experimental results, the system is found effective to remove a burr along the edge of a hole on a workpiece with free curved surface.

Keywords : CAD, CAM, Chamfering, Free curved surface, Industrial robot

1 Introduction

The chamfering performed to deburr the edge of a workpiece after the machining process is necessary to obtain workpieces with a certain quality. The requirement of automation of chamfering has strongly increased as the work is done in a contaminated environment. Therefore, industrial robots have been employed to automate the chamfering and / or deburring. However, the characteristics of burrs, whose shape are not necessarily constant, make it difficult to automate the operation.

There was a study to cope with a variety of burr shapes by use of a laser-sensor to measure the shape in advance [1]. The others solved the problem by a servo control and a compliance control to stabilize deburring condition [2-5]. These methods focused not on the path generation of itself but on the improvement of the tool path. While most of robots are controlled under a teaching-playback mode, some studies used CAD/CAM system to realize high-leveled automation [6,7]. However, they did not consider the attitude of the robot arm, but considered the attitude of the tool.

*Corresponding author. Tel: +81-76-234-4734 ; Fax: +81-76-234-4733

E-mail addresses: nasakawa@t.kanazawa-u.ac.jp (N. Asakawa), takeuchi@mce.uec.ac.jp (Y. Takeuchi)

When an operation is performed with articular robots, it is important to keep the axis limits. In order to solve the problem, we have already reported a chamfering system considering the attitude of the robot arm [8]. Although we successfully obtained a certain quality on the free-curved edge, the workpiece shape was limited for the case of hole on a cylindrical workpiece.

In the study, we treat a hole on a free curved surface, such as holes on automobile transmission, metal molds consisting of complicated surface, button holes of a portable phone, etc. Since the edge of the hole is not a simple circle but a 3-dimensional curved line, the chamfering has been conducted by skilled workers with files, whetstones or rotary-bars. To automate the chamfering, we introduce a robot with six degrees of freedom on the basis of CAD/CAM system. As a result, the system is found effective to chamfer along the edge of a hole on a workpiece with a free curved surface

2 System configuration

The system configuration is illustrated in Fig. 1. The robot having 6-DOF (Fanuc Co. Ltd. : Robot S-700), shown in Fig. 2, is used. The positioning accuracy of the robot is 0.2 mm, the load capacity is 300 N, and the arm is 2600 mm in length. As a chamfering tool, a motor with rotary-bar shown in Fig. 3 is attached to the robot arm. A touch sensor is mounted at the robot arm by a detachable holder as well as the chamfering tool to recognize the position and attitude of the workpiece. The workpiece shape is defined by use of 3D-CAD system. The system can also treat any other 3D-CAD data whose architecture is available with modification. In the article, Design base (Ricoh Co. Ltd.) is used.

The chamfering path is generated by use of the our own CAM system on EWS (Sun micro systems Co. Ltd. : Sparc station), based on the CAD data. The robot control commands generated on a personal computer (NEC Ltd. : PC-9801) with reference to the chamfering path are transferred to the robot controller through a RS-232-C. Then, the chamfering tool mounted to the robot arm starts chamfering.

3 Basic chamfering model

3.1 Workpiece

Let us assume an edge with a right angle consisting of planes *A* and *B*, which is chamfered with 45 degree, as shown in Fig. 4. The symbols are as follows;

P Chamfering point

N Normal vector at each chamfering point

F Feed vector to the next chamfering point

$\boldsymbol{D}$ Tool axis vector

X_n means the *n-th X* in the figure. The parameters are called "workpiece surface data".

3.2 Chamfering tool

The chamfering tool used in the system is modeled as shown in Fig. 5 and attached to the robot, where

$\boldsymbol{D}$ Tool axis vector

$\boldsymbol{T}_f$ Functional tool vector

$\boldsymbol{T}_g$ Geometrical tool vector

These parameters are called "tool attitude data". The tool vector $\boldsymbol{D}$ is parallel to the rotational axis of the chamfering tool, and is perpendicular to the vector $\boldsymbol{N}_{arm}$, which is also parallel to the center axis of the robot arm.

Since the tool can machine a workpiece with any side part of the rotary-bar pushed against the workpiece, the functional tool vector $\boldsymbol{T}_f$, representing the tool pushing direction, can be defined as an arbitrary vector within a plane *M*, whose normal is vector $\boldsymbol{D}$. Considering the function of tool, the tool requires five degrees of freedom.

On the other hand, the robot used in the system has six axes, which give the tool an arbitrary attitude. The robot attitude can be defined by appointing two vectors, the tool axis vector $\boldsymbol{D}$ and the geometrical tool vector $\boldsymbol{T}_g$, parallel to $\boldsymbol{N}_{arm}$, considering the tool holder. The tool path generation means the conversion from a series of workpiece surface data to a series of tool attitude ones.

4 Main processor

4.1 Generation of workpiece surface data

An example of the modeled objective shape of workpiece with free-curved surface and hole is shown in Fig. 6. The shape is a simplified model of a ellipse-like hole on a free curved surface and is obtained by the subtractive operation between ellipse-like column and a cube having a free-curved surface on CAD system. Let us apply the above model to obtain the workpiece surface data for chamfering.

In Fig. 7, the edge *E* is obtained as a cross section between the ellipse-like column and the surface *S*. The edge *E* is equally divided by points **P**, depending on a chamfering condition. $\boldsymbol{N}_{pn}$ is the normal vector at the $\mathbf{P}_n$. $\boldsymbol{F}_n$ is the vector directing from $\mathbf{P}_n$ to $\mathbf{P}_{n+1}$ respectively. An outer product of $\boldsymbol{N}_{pn}$ and $\boldsymbol{F}_n$ corresponds to the tool axis vector $\boldsymbol{D}$ of the plane *A* in Fig. 4. As shown in Fig. 8, the vectors $\boldsymbol{D}_n$ and $\boldsymbol{N}_n$ are

obtained by revolving $\boldsymbol{D}_{pn}$ and $\boldsymbol{N}_{pn}$ around $\boldsymbol{F}_n$ by 45 degrees respectively. As a result, the vectors obtained correspond to the normal vector $\boldsymbol{N}$, the feed vector $\boldsymbol{F}$ and the tool axis vector $\boldsymbol{D}$ in Fig. 4 at the chamfering point **P**. An example of the workpiece surface data displayed on CRT is shown in Fig. 9.

4.2 Conversion to the tool path

In this step, the workpiece surface data such as the chamfering point **P**, the normal vector $\boldsymbol{N}$, the feed vector $\boldsymbol{F}$ and the tool axis vector $\boldsymbol{D}$ are converted to the tool attitude data such as the tool axis vector $\boldsymbol{D}$, the geometrical tool vector $\boldsymbol{T}_g$ and the functional tool vector $\boldsymbol{T}_f$. The vector $\boldsymbol{D}$ in the workpiece surface data is the same one in the tool attitude data. The vector $\boldsymbol{T}_f$, standing for the tool pushing direction is obtained as an inverse vector of $\boldsymbol{N}$. The problem is how to relate $\boldsymbol{T}_f$ to $\boldsymbol{T}_g$.

As a simple method, let us use $\boldsymbol{T}_f$ as $\boldsymbol{T}_g$. The tool path generated by the method is shown in Fig. 10. With the method, however, the change in $\boldsymbol{N}$ directly influences $\boldsymbol{T}_g$. When the robot is driven by $\boldsymbol{T}_g$, as shown in Fig. 11, the change in the robot attitude becomes large, and makes the robot joints easily reach to the rotational angle limit. It is due to the direct generation of $\boldsymbol{T}_g$ (=$\boldsymbol{T}_f$) from an inverse vector of $\boldsymbol{N}$.

As is mentioned above, $\boldsymbol{T}_f$ can be defined as an arbitrary vector within a plane having the vector $\boldsymbol{T}_f$ as its normal vector. When $\boldsymbol{T}_f$ is fixed, the tool can rotate around $\boldsymbol{D}$. Therefore, $\boldsymbol{T}_g$ can arbitrary be selected from $\boldsymbol{T}_f$, which exists infinitely around $\boldsymbol{D}$. This is because five degrees of freedom is enough for the tool though a robot has six degrees of freedom. In other words, a degree of freedom is redundant.

Based on the above characteristics, $\boldsymbol{T}_f$ can be converted to the $\boldsymbol{T}_g$, considering an attitude of the robot. The concept is realized by making selection of $\boldsymbol{T}_g$ so that $\boldsymbol{T}_f$ may make the changes in the robot attitude as small as possible.

Figure 12 illustrates the developed method to generate Tg from Tf with smaller changes in the robot attitude using “reference point“,

where

$\boldsymbol{O}$	Reference point
$\boldsymbol{R}$	Reference vector
l	A plane having $\boldsymbol{D}$ as normal vector and including $\boldsymbol{T}_f$

$\boldsymbol{O}$ is placed near the basement of the robot. $\boldsymbol{R}$ is generated on the basis of the direction from **P** to $\boldsymbol{O}$; therefore, $\boldsymbol{R}$ represents the direction from the robot location to the chamfering point. If $\boldsymbol{T}_g$ could be kept near to $\boldsymbol{R}$, the change in the tool attitude will be kept small because $\boldsymbol{R}$ is changed smoothly according to changes of the chamfering point.

On the other hand, $\boldsymbol{T}_f$ can be selected from all the vectors included within l because $\boldsymbol{T}_g$ is included within l, as is mentioned above. In other words, $\boldsymbol{T}_g$ can be selected from all the vectors included within l.

In order to satisfy both requirements, $\boldsymbol{T}_g$ is selected as projected $\boldsymbol{R}$ on l. Then, the tool can keep the attitude near to the direction from robot to the chamfering point and change its attitude smoothly. Besides, it makes no influence to a chamfering condition.

As a result, the robot can be driven by the path with smaller changes in the attitude, as shown in Fig. 13, and the tool attitude prevents the robot joints from reaching their limit of rotational angle. The tool path generated by the method is shown in Fig. 14.

5 Matching between the coordinate systems

The workpiece produced on the basis of CAD data can be placed arbitrarily on the table in front of the robot. A tool path generated in the workpiece coordinate system, as described in the previous section, has to be converted to that in the robot coordinate system. However, the workpiece coordinate system has nothing to do with the robot coordinate one. The process, called “matching”, relates these two coordinate systems each other. A touch sensor with a certain voltage, which is attached at the robot arm, makes contact with the workpiece, the voltage falls down to zero. This allows the robot to recognize the contact position. By use of the location information of the workpiece placed on the table, the tool position and the tool axis vector in the workpiece coordinate system is transformed to those in the robot coordinate system so that the system can generate the robot control commands necessary to control the robot movement.

6 Post processor

The tool path is generated as a set of chamfering points and two vectors $\boldsymbol{T}_g$ and $\boldsymbol{D}$, and is converted to the robot attitude expression since the robot used in the system has its own attitude expression. The attitude expression of robot, defined by W,P and R around x,y and z axes respectively, is shown in Fig. 15. Then, the extra tool path is added to the obtained tool path since the tool path generated in the previous section includes no path from the end of tool path to the beginning of the next one.

On the other hand, a robot is controlled with data written in specified format called “robot control command”. The system converts the tool path to the robot control commands according to the robots’s format, taking account of a chamfering speed and the mode such as chamfering or moving and so on.

7 Experiment

A chamfering experiment was carried out to chamfer along the edge of a hole on a workpiece with free curved surface, which is difficult to chamfer with a simple tool. The workpiece material is a plain carbon steel S45C, whose shape is about 100mm ´ 100mm ´ 100mm having a free-curved surface and a hole of 50mm ´ 20mm with ellipse-like edge as shown in Fig. 16. The workpiece is machined with milling machine according to the same CAD data in advance. The chamfering conditions are follows; rotational speed of the tool : 35000 rpm, feed rate : 1.0mm/sec and depth of cut : 0.1 mm. The view of robot under chamfering is shown in Fig. 17. After several times repetition of the operation, the edge was chamfered by 1 mm in height as shown in Fig. 18, where the good chamfered edge can be seen.

8 Conclusion

The automatic chamfering system using an industrial robot is developed. The chamfering path is generated on the basis of CAD/CAM system. The system allows the chamfering tool to be set in a designated posture by 6-axis control. The system is experimentally found effective to chamfer along the edge of a hole on a workpiece with free-curved surface, considering robot arm attitude.

References

[1] Seliger G, Hsieh LH, Spur G. Sensor-Aided Programming and Movement Adaptation for Robot-Guided Deburring of Castings. *Annals of the CIRP,* 1991; 40(1): p. 487.

[2] Kazerooni H, Bausch JJ, Kramer BM. An Approach to Automated Deburring by Robot Manipulators. *Trans. of the ASME,* 1986; 108: p. 354.

[3] Elbestawi MA, Yuen KM, Srivastava AK, Dai H. Adaptive Force Control for Robotic Disk Grinding. *Annals of the CIRP,* 1991; 40(1): p. 391.

[4] Her MG, Kazerooni H. Automated Robotic Deburring of Parts Using Compliance Control. *Trans. of the ASME,* 1991; 113: p. 60.

[5] Chang LH, Fu LC. Nonlinear Adaptive Control of a Flexible Manipulatory for Automated Deburring. *Proc. IEEE Int. Conf. on Robotics and Automation,* 1997; p. 2844.

[6] Bone GM, Elbestawi MA. Sensing and Control for Automated Robotic Edge Deburring. *Trans. of IEEE Industrial Electronics*, 1994; 41: p. 2 137.

[7] Nonaka Y, Sakaue S, Yanagihara Y, Yokoshima K. Development of an Impeller Grinding Robot System and a Gyro-moment Compensated Compliance Control. *Proc. IEEE Int. Conf. on Robotics and Automation*, 1995; p. 2084.

[8] Asakawa N, Takeuchi Y. Automation of Chamfering by an Industrial Robot; For the Case of Machined Hole on a Cylindrical Workpiece. *Proc. of IEEE Int. Conf. on Robotics & Automation*, 1998; p. 2452.

Figure captions

Fig. 1 Configuration of the system

Fig. 2 Whole view of the robot used in the system

Fig. 3 Chamfering tool used in the system

Fig. 4 Workpiece surface data on a basic chamfering model

Fig. 5 Vectors for tool attitude

Fig. 6 CAD model of a workpiece

Fig. 7 Generation of chamfering points

Fig. 8 Generation of tool vectors

Fig. 9 Workpiece surface information

Fig. 10 Tool path based on the simple method

Fig. 11 Change in the robot attitude based on the simple method

Fig. 12 Concept to generate the vector $\boldsymbol{T_g}$ using reference point $\boldsymbol{O}$

Fig. 13 Change in the robot attitude based on the new method

Fig. 14 Tool path based on the new method

Fig. 15 Expression of tool attitude with angle

Fig. 16 Workpiece before chamfering

Fig. 17 Robot under chamfering

Fig. 18 Workpiece after chamfering

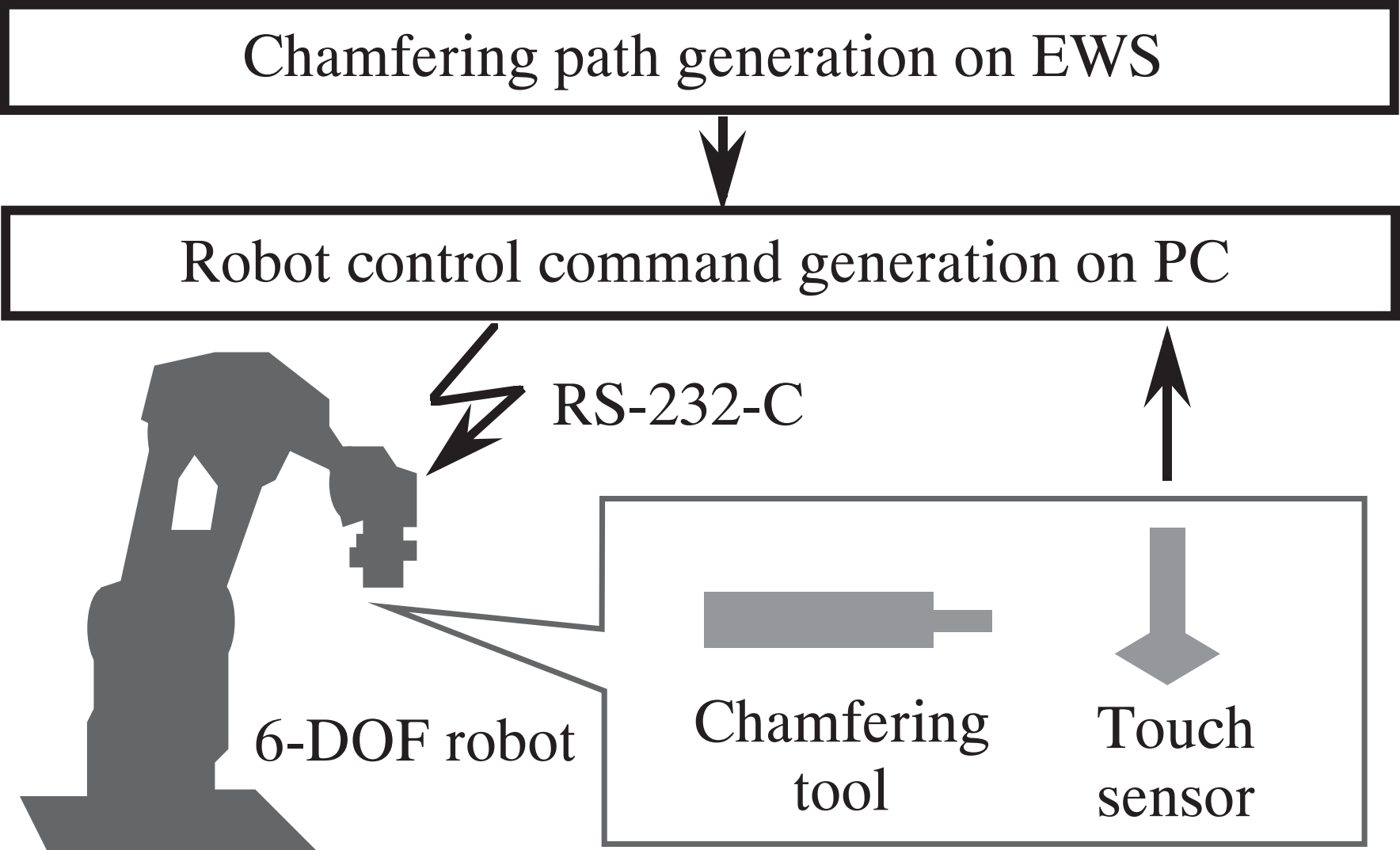
Chamfering path generation on EWS
Robot control command generation on PC
RS-232-C
6-DOF robot
Chamfering tool
Touch sensor

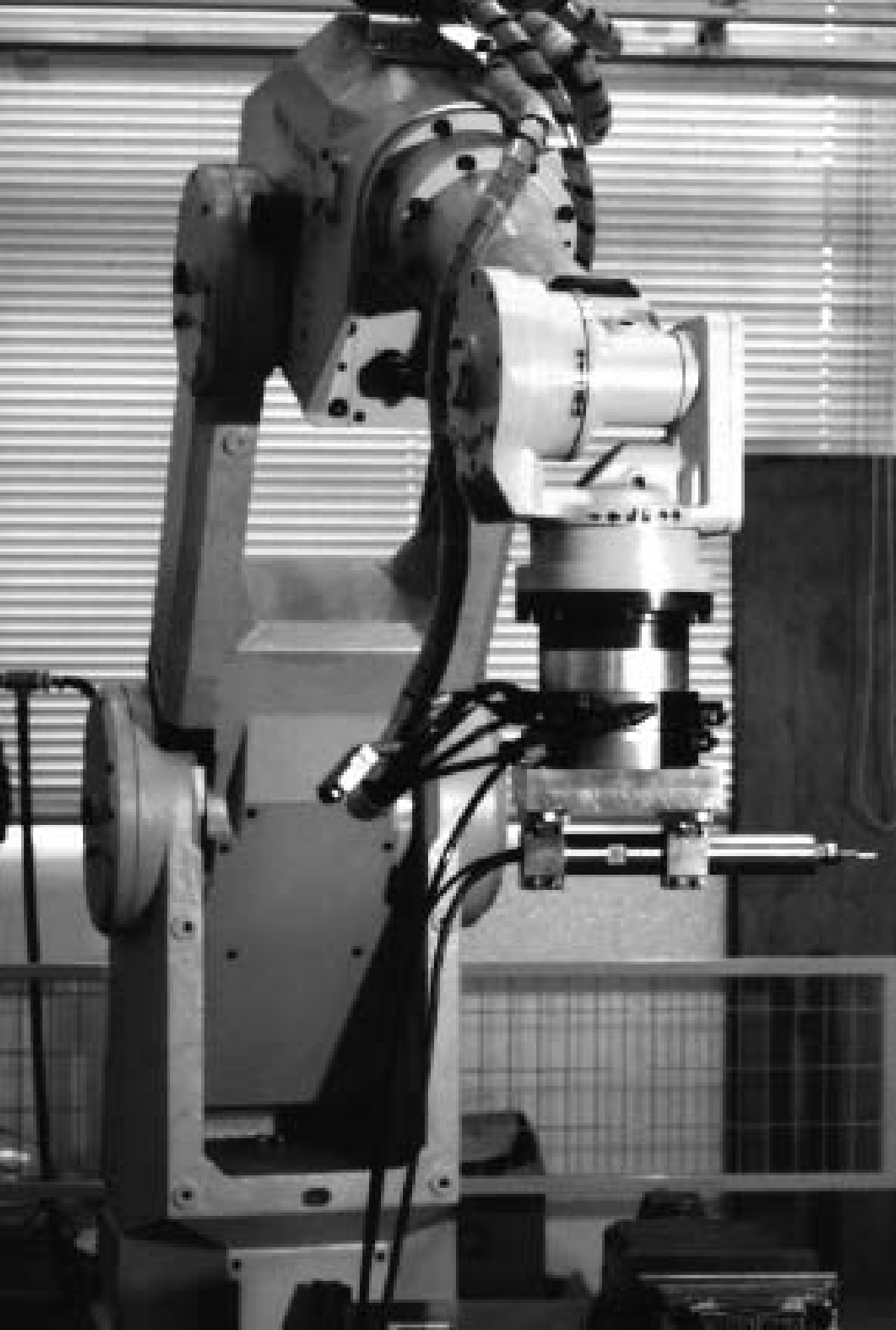

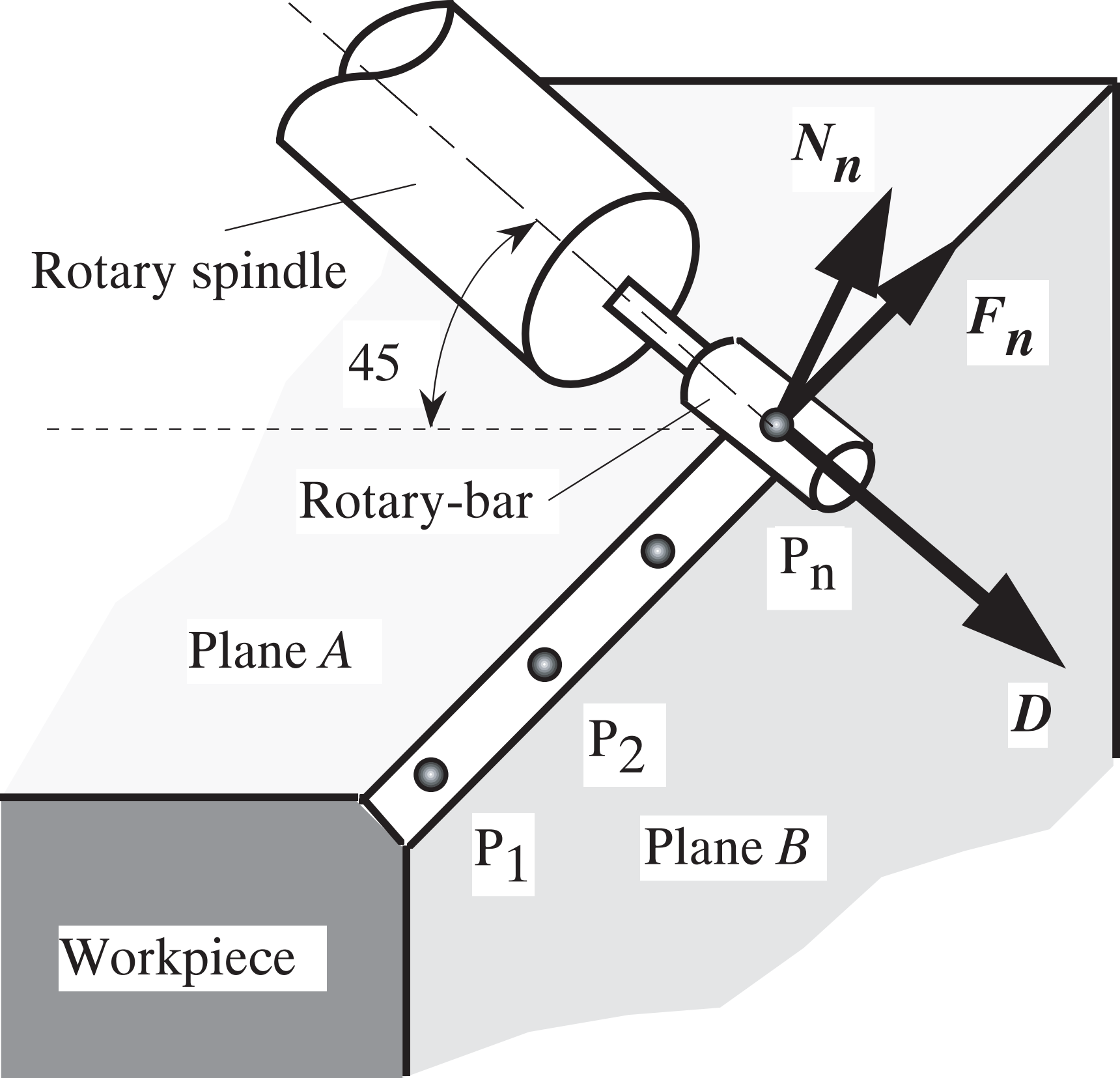
Rotary spindle
45
Rotary-bar
N_n
F_n
P_n
D
Plane A
P_2
P_1
Plane B
Workpiece

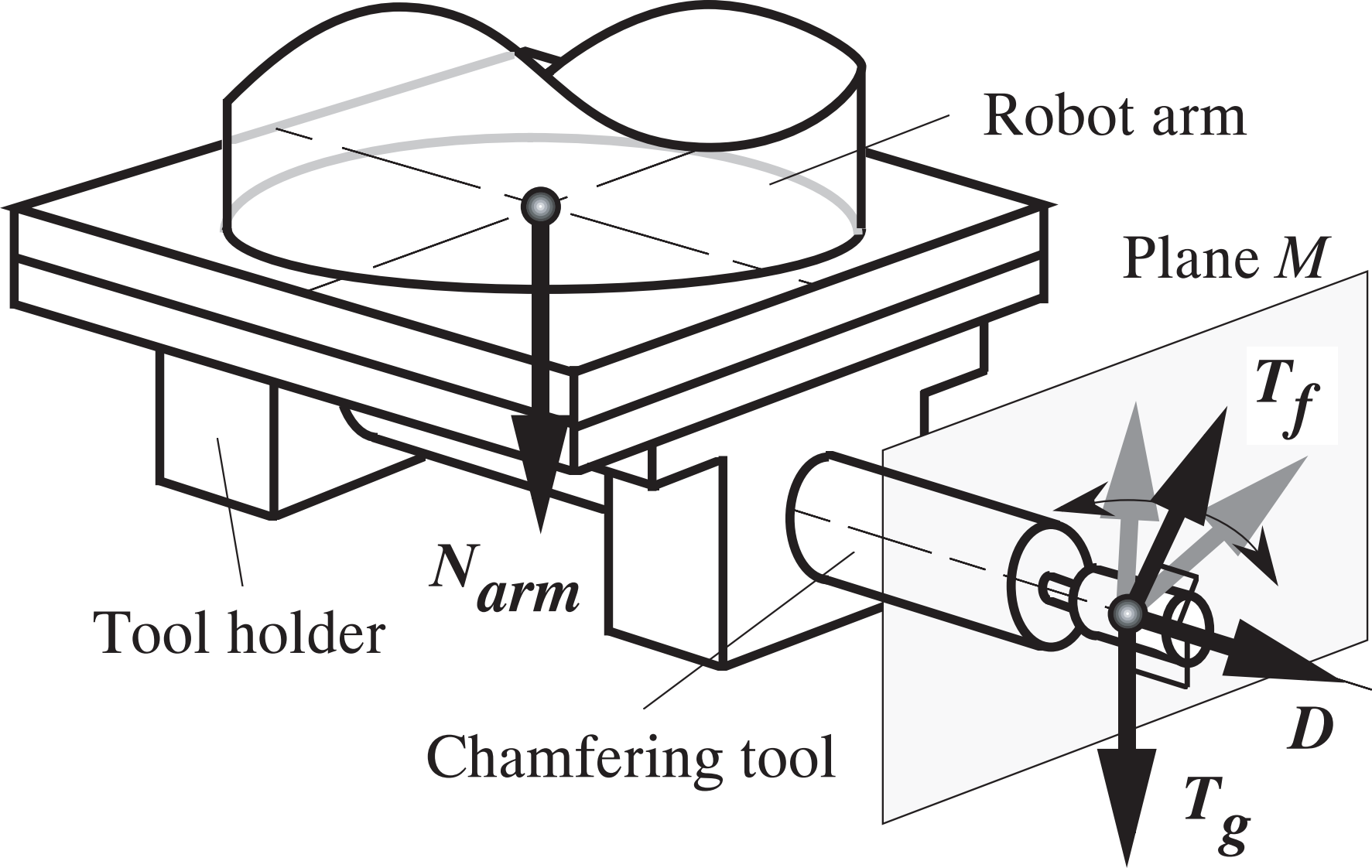
Robot arm
Plane M
T_f
N_{arm}
Tool holder
Chamfering tool
D
T_g

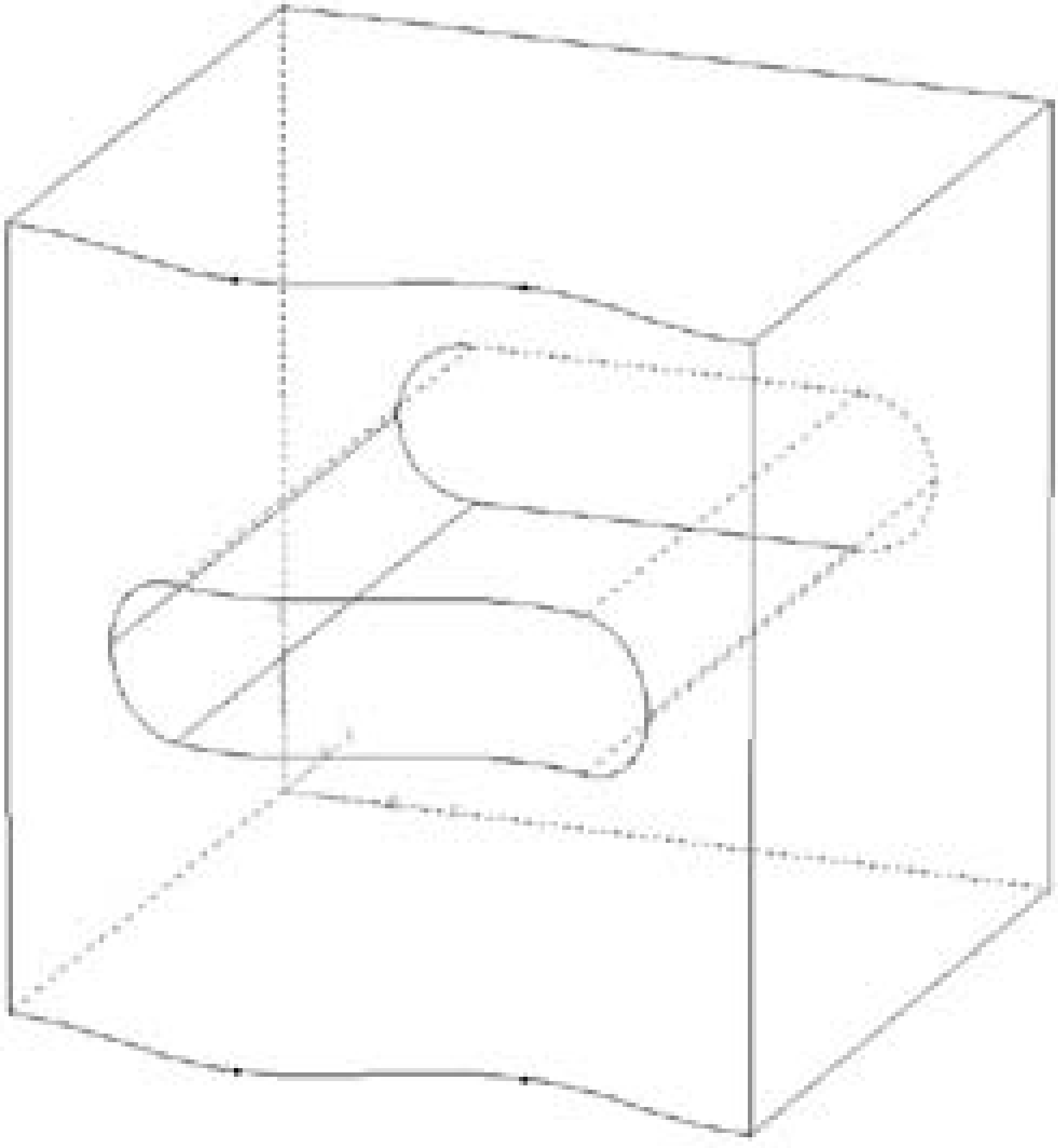

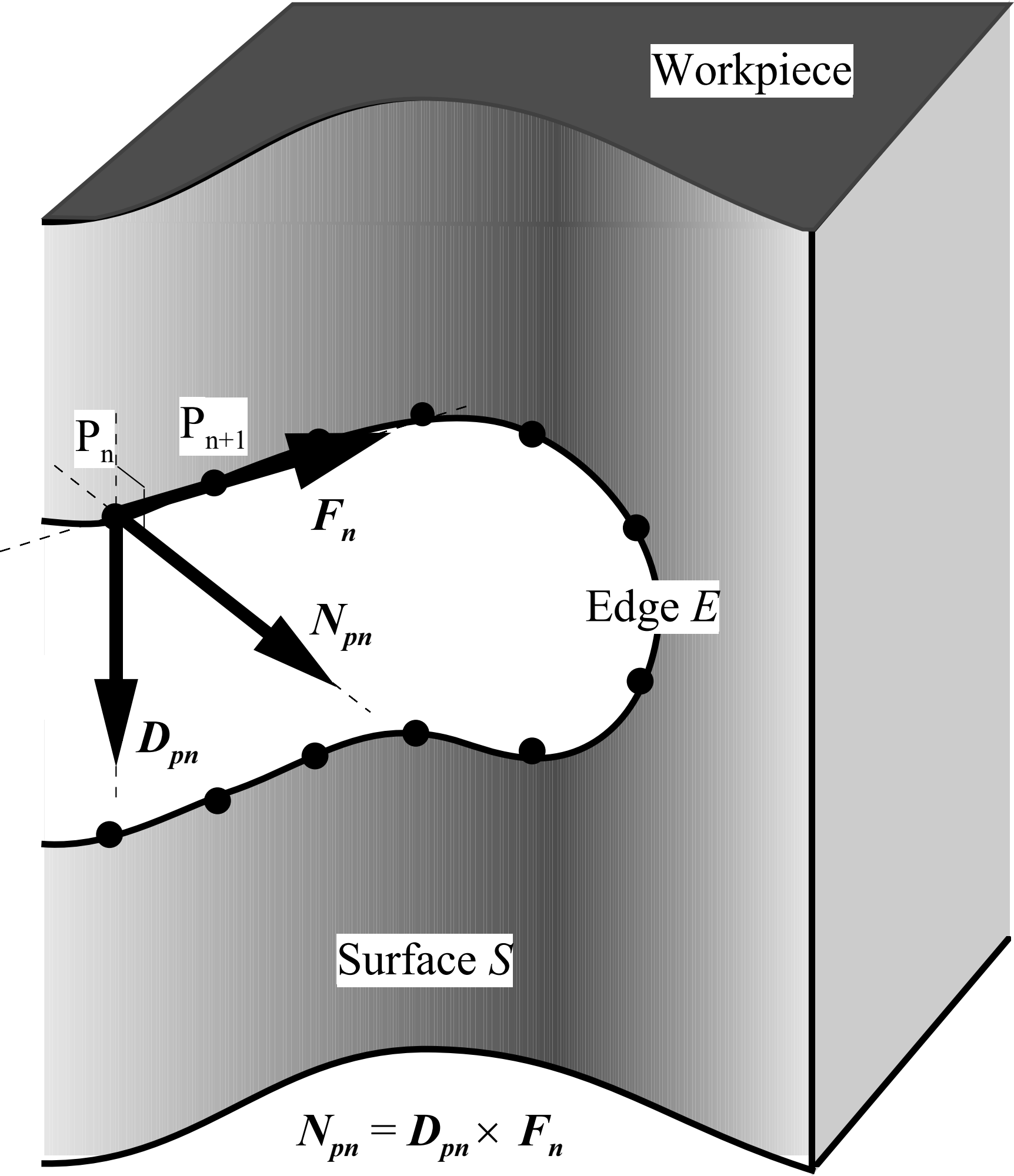
Workpiece
P_n
P_{n+1}
F_n
N_{pn}
Edge E
D_{pn}
Surface S
$N_{pn} = D_{pn} \times F_n$

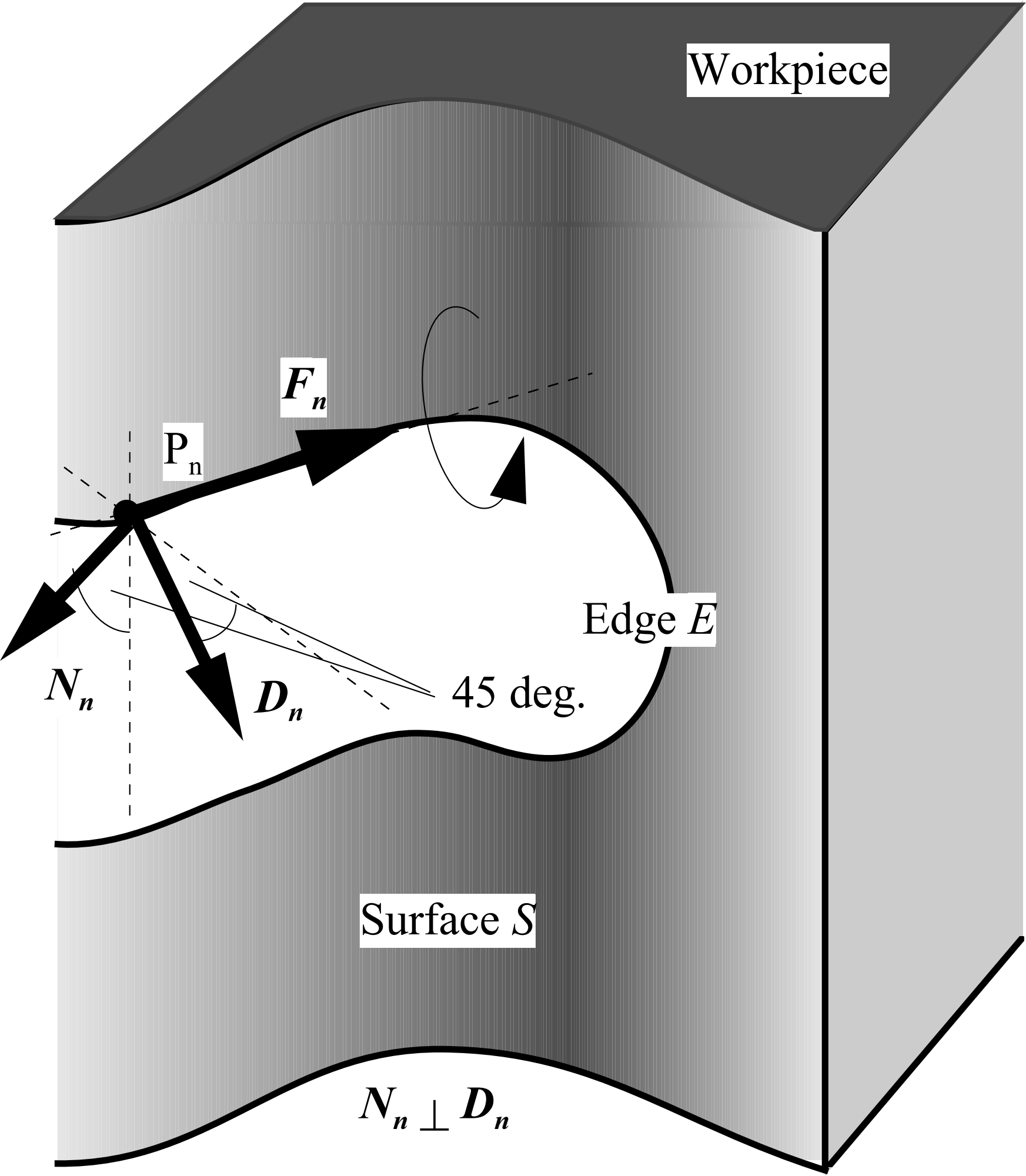
Workpiece
F_n
P_n
Edge E
N_n
D_n
45 deg.
Surface S
$N_n \perp D_n$

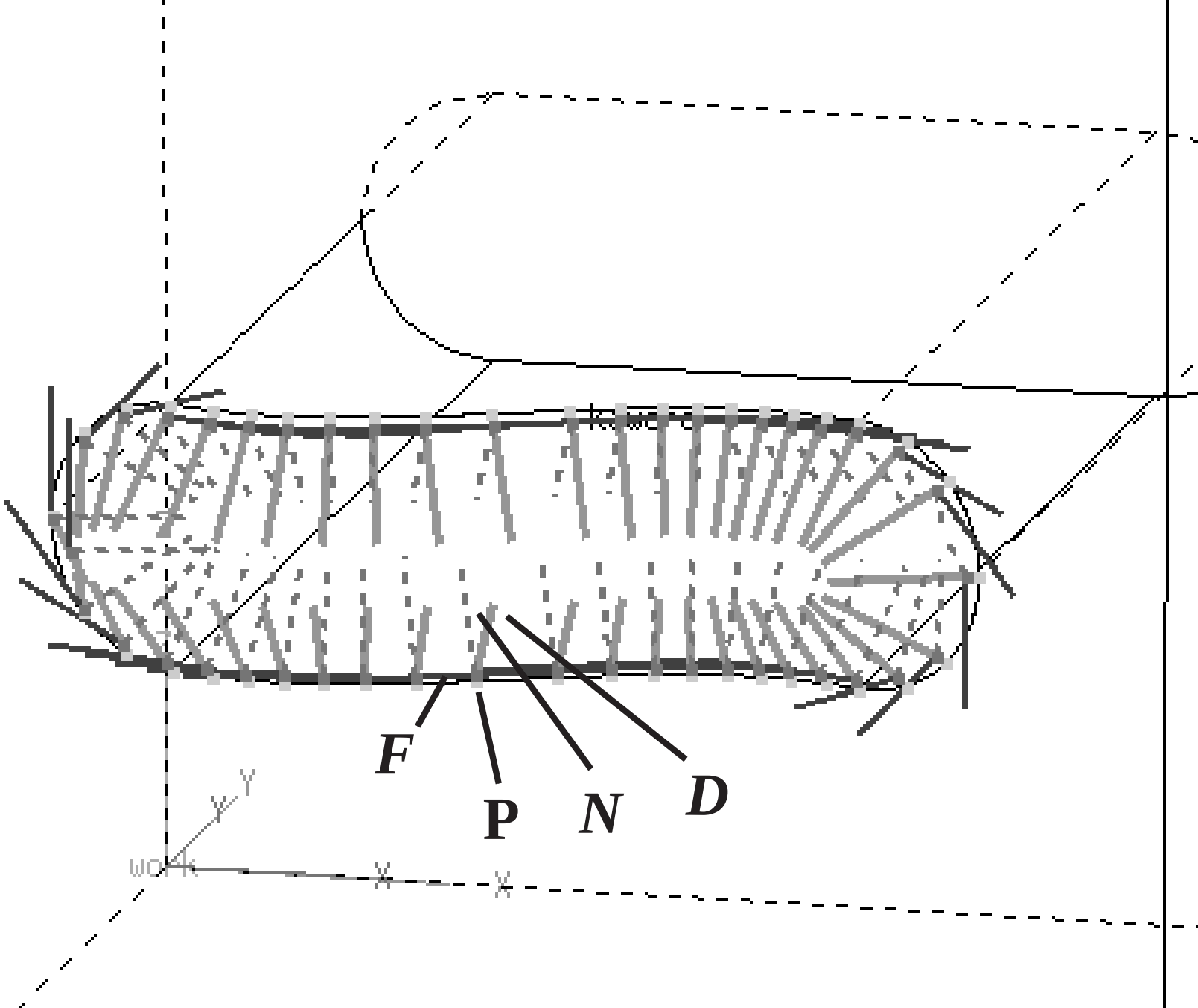
F
P
N
D

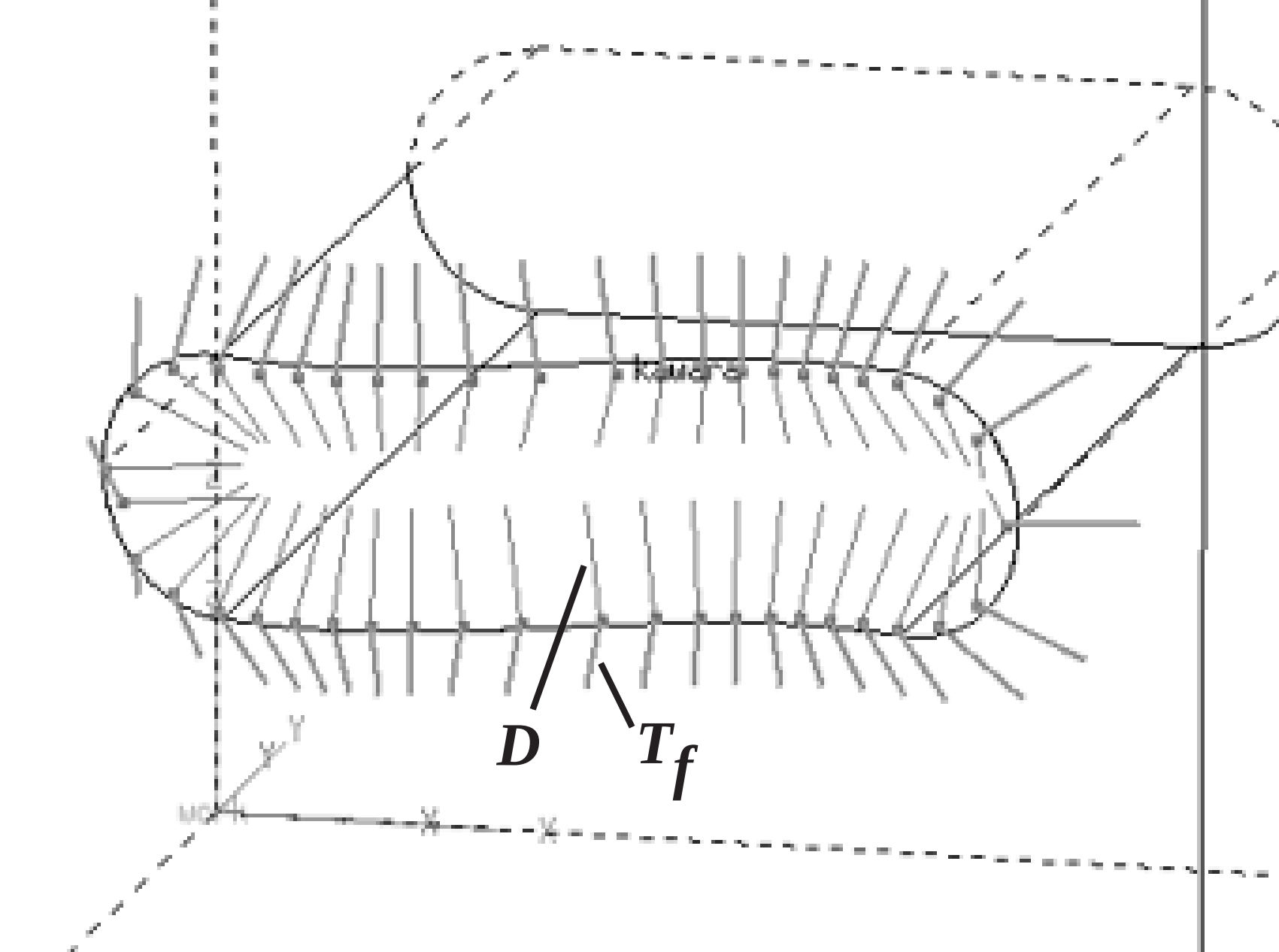
kaura
D
T_f
Y
X
X

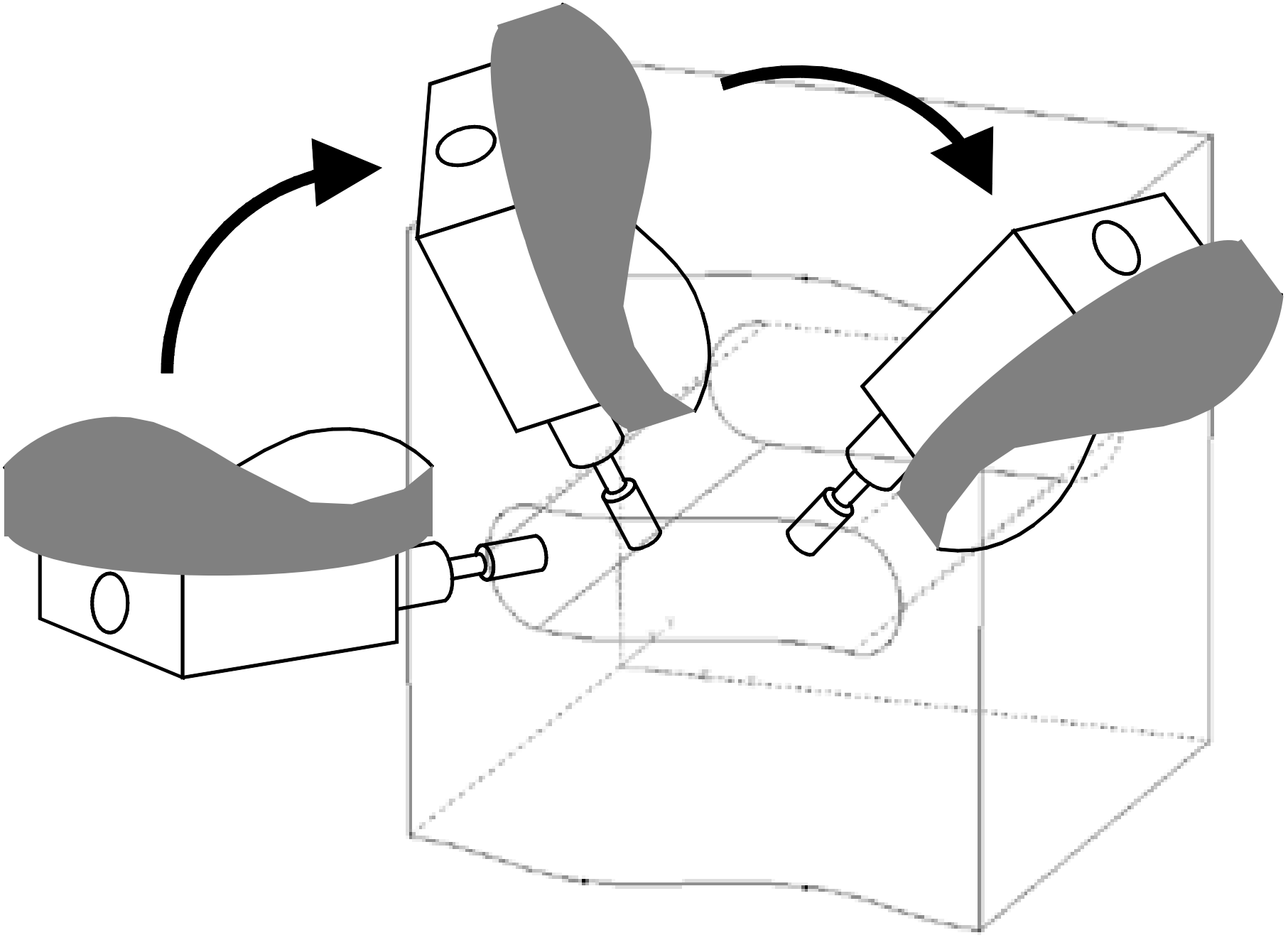

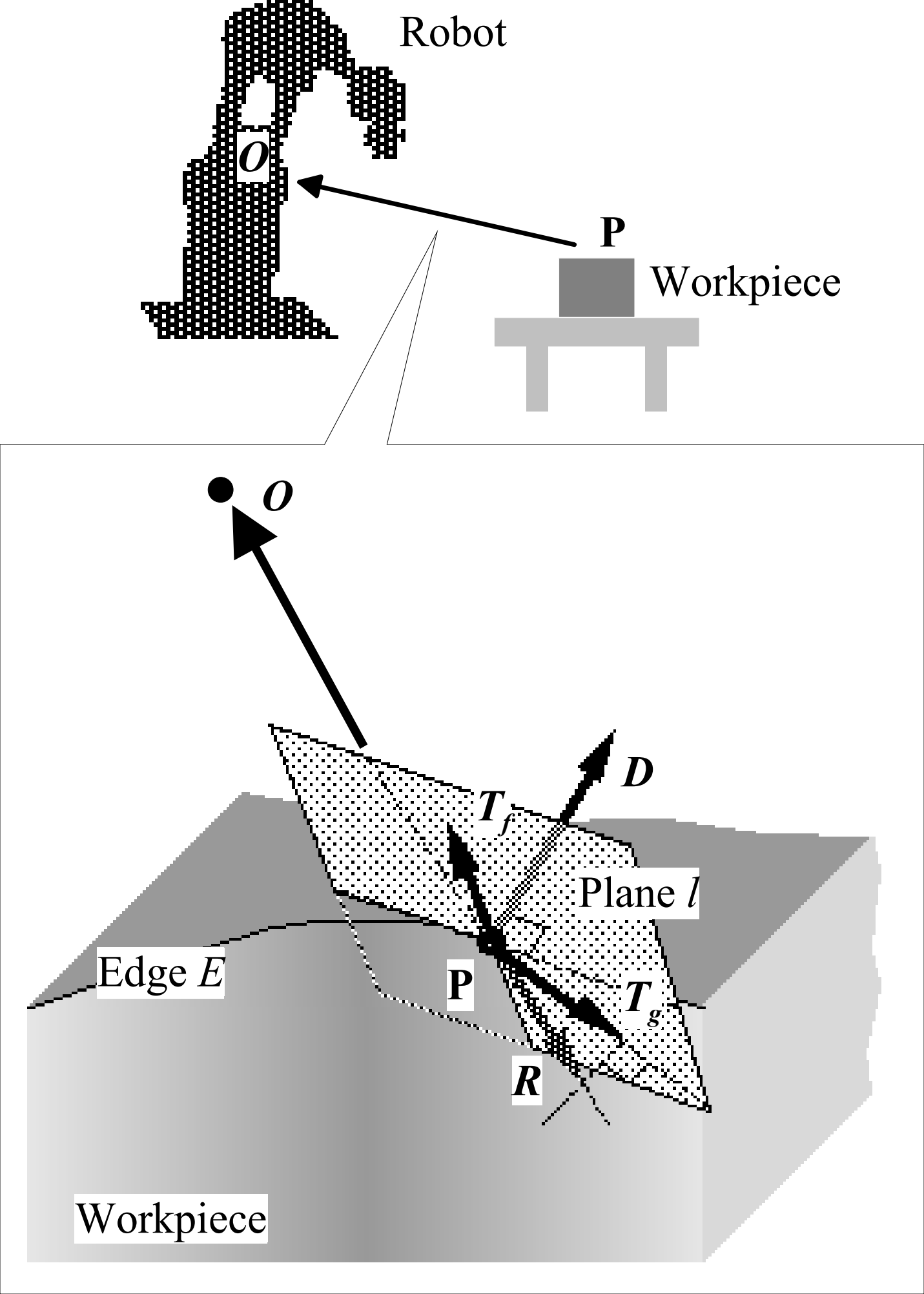
Robot
O
P
Workpiece
O
D
T_f
Plane l
Edge E
P
T_g
R
Workpiece

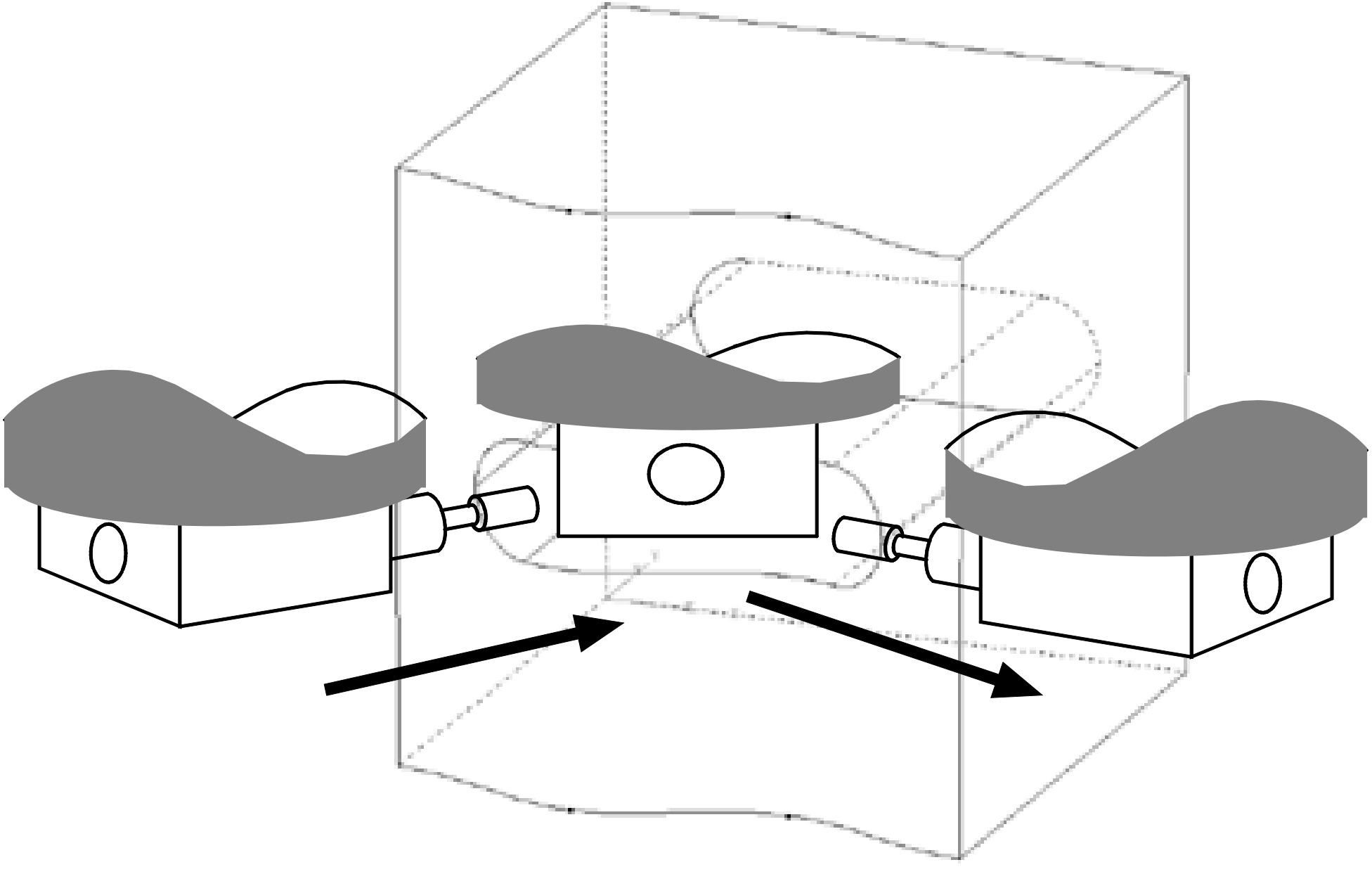

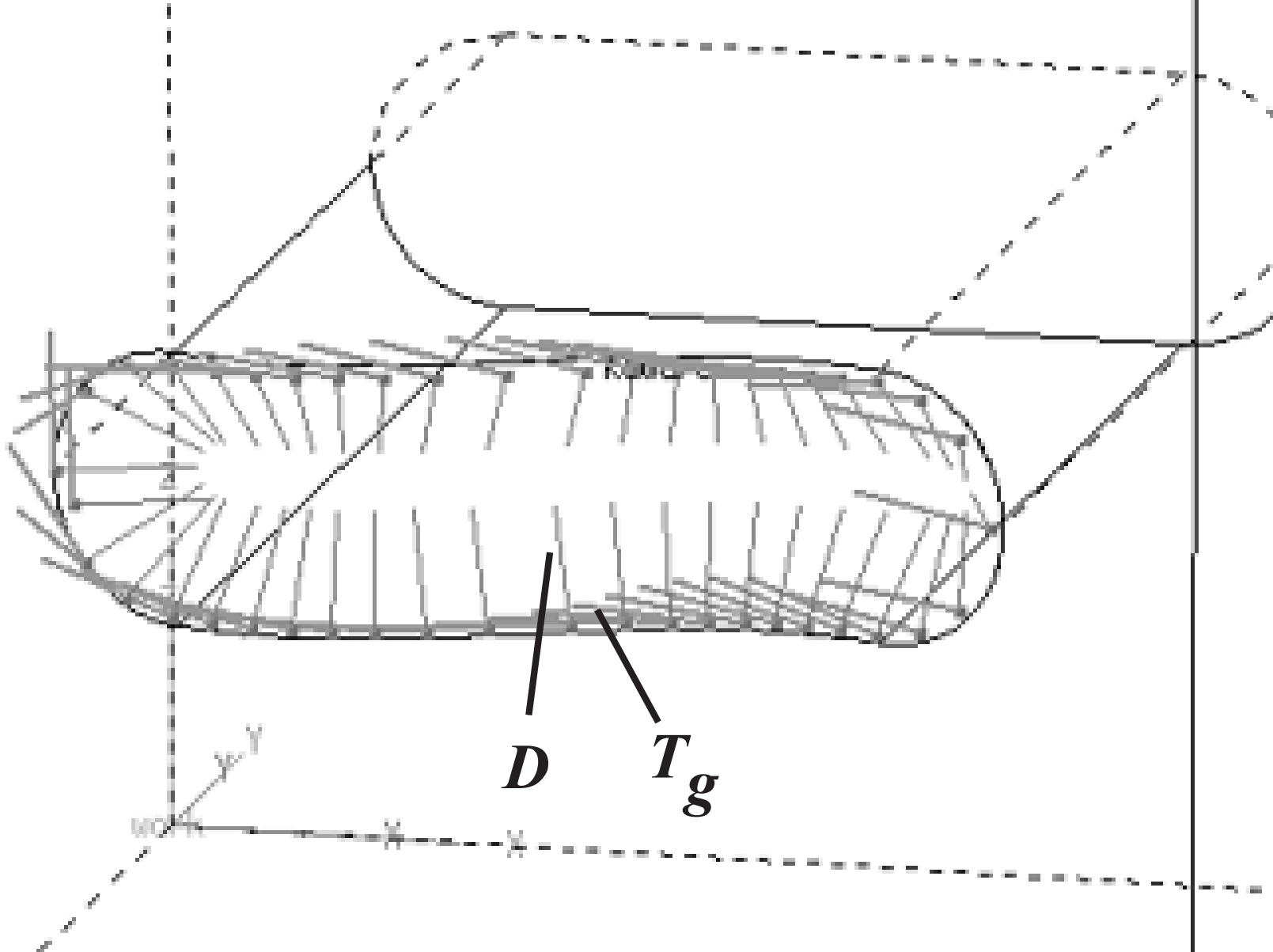
D
T_g

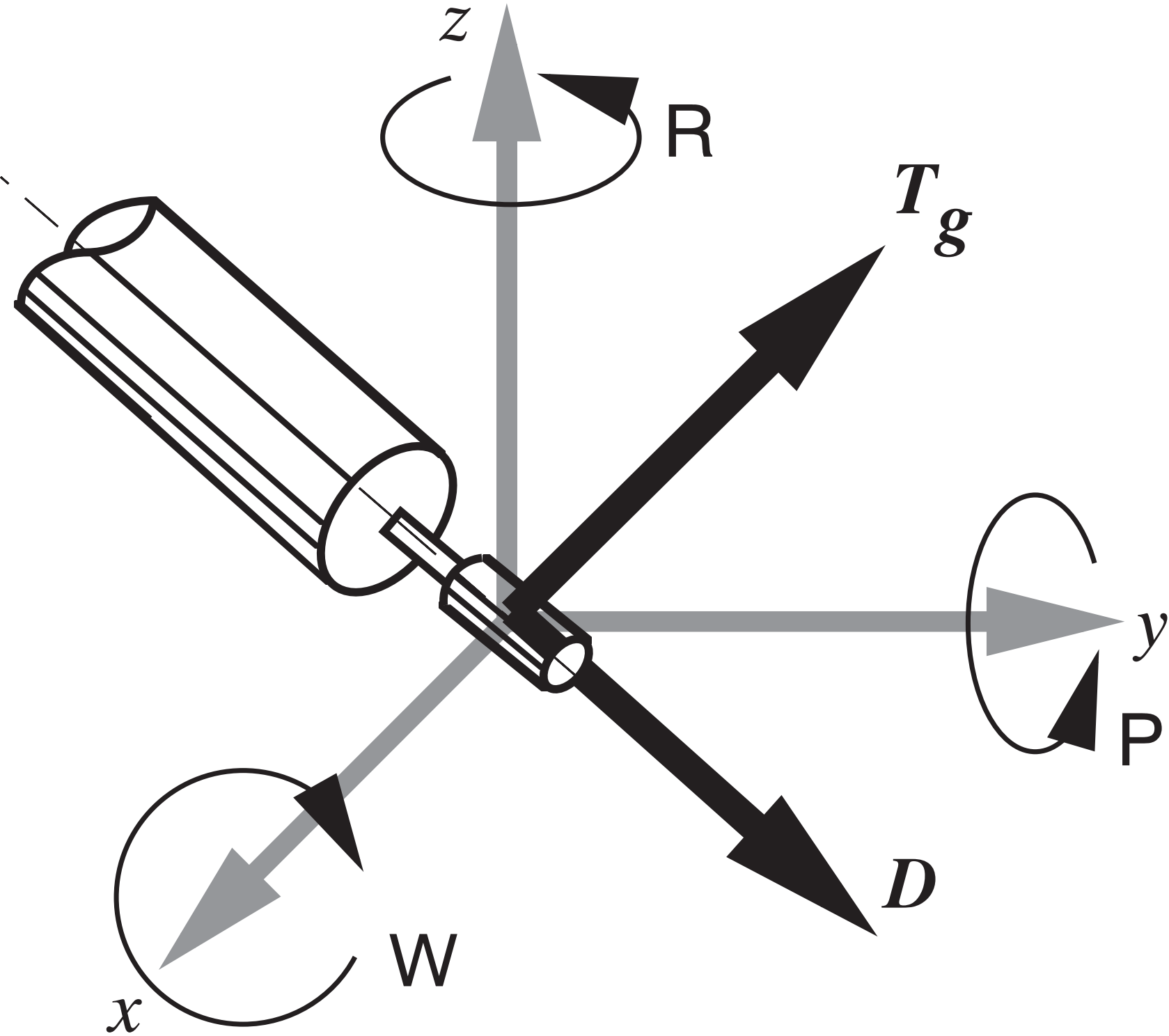
z
R
T_g
y
P
D
W
x

TARGET