On the Complexity of Minimum Congestion Embedding of Acyclic Graphs into Ladders

メタデータ	言語: English 出版者: 公開日: 2017-10-03 キーワード (Ja): キーワード (En): 作成者: Matsubayashi, Akira メールアドレス: 所属:
URL	http://hdl.handle.net/2297/3534

PAPER *Special Section on Discrete Mathematics*

On the Complexity of Minimum Congestion Embedding of Acyclic Graphs into Ladders

Akira MATSUBAYASHI†, ***Member***

SUMMARY It is known that the problem of determining, given a planar graph G and an integer m, whether there exists a congestion-1 embedding of G into an $m \times k$-grid is NP-complete for a fixed integer $k \geq 3$. It is also known that the problem for $k = 3$ is NP-complete even if G is restricted to an acyclic graph. The complexity of the problem for $k = 2$ was left open. In this paper, we show that for $k = 2$, the problem can be solved in polynomial time if G is restricted to a tree, while the problem is NP-complete even if G is restricted to an acyclic graph.

key words: *graph embedding, graph layout, VLSI layout, grid*

1. Introduction

The problem of efficiently implementing parallel algorithms on parallel machines and the problem of efficiently laying out VLSI systems onto VLSI chips have been studied as the graph embedding problem, which is to embed a guest graph within a host graph with certain constraints and/or optimization criteria. For the former problem, guest graphs and host graphs represent parallel algorithms and parallel machines, respectively, and the purpose is to minimize communication overhead, such as dilation and/or congestion of the embedding. For the latter problem, a guest graph represents connection requirements of a system and a host graph usually represents a rectangular grid modeling wafer. In VLSI layout, there are various criteria such as wire length, wire congestion, crossing number, and the layout area.

We consider minimal congestion embeddings of graphs into grids. Such embeddings are also called *layouts*. The grids are well known not only as a model of VLSI chips but also as one of the most popular processor interconnection graphs for parallel machines. As mentioned in [3], [5], the minimal congestion embedding is very important for a parallel machine that uses cut-through switching techniques, which are well used in recent architectures for node-to-node communication [8]. Also in VLSI layout, the minimal congestion embeddings are crucial in the sense that the congestion is a lower bound for the number of layers.

Formann and Wagner [1] showed that the following problem is NP-complete.

Graph Layout I

Instance A connected planar graph G and an integer a.

Question Does there exist a layout of G into a rectangular grid with at most a vertices?

Kramer and Leeuwen [4] showed that Graph Layout I can be reduced to the following problem:

Graph Layout II

Instance A connected planar graph G and integers m, n.

Question Does there exist a layout of G into an $m \times n$-grid?

Thus, Graph Layout II is NP-hard.

It is not only interesting but also important to investigate the complexity of variants of Graph Layout I and Graph Layout II in which G is restricted to a smaller class than planar graphs. One of the most important graphs of such classes are trees. However, the complexity of the general problem of laying out trees is still open.

For another variant of Graph Layout II, it is shown in [6] that Graph k-Layout described below is NP-complete for $k \geq 3$.

Graph k-Layout

Instance A planar graph G and an integer m.

Question Does there exist a layout of G into an $m \times k$-grid?

It is also shown in [7] that Graph 3-Layout is NP-complete even if G is restricted to an acyclic graph. The complexity of Graph 2-Layout was left open.

In this paper, we show that for $k = 2$, the problem can be solved in polynomial time if G is restricted to a tree, while the problem is NP-complete even if G is restricted to an acyclic graph. We show these results by proving the following Theorems:

Theorem 1: For a given tree T and an integer m, we can determine in polynomial time whether there exists a layout of T into an $m \times 2$-grid.

Theorem 2: The problem of determining, given an acyclic graph G and an integer m, whether there exists a layout of G into an $m \times 2$-grid is NP-complete.

The paper is organized as follows: Some definitions are given in Sect. 2. We prove Theorems 1 and 2 in Sects. 3 and 4, respectively.

Manuscript received September 1, 2000.
Manuscript revised November 20, 2000.

†The author is with the Faculty of Engineering, Kanazawa University, Kanazawa, 920-8667 Japan.

2. Preliminaries

Let G be a graph and let $V(G)$ and $E(G)$ denote the vertex set and edge set of G, respectively. We denote the degree of $v \in V(G)$ by $\deg_G(v)$. For $U \subseteq V(G)$, $G[U]$ is the subgraph of G induced by U, and $G - U$ is $G[V(G) - U]$. Similarly, for $S \subseteq E(G)$, $G[S]$ is the subgraph of G induced by S, and $G-S$ is the graph with vertex set $V(G)$ and edge set $E(G) - S$. For graphs G and H, $G \cup H$ is the graph with vertex set $V(G) \cup V(H)$ and edge set $E(G) \cup E(H)$.

We denote the set of integers $\{i \mid 0 \leq i < m\}$ by $[m]$. For a d dimensional vector $\boldsymbol{v}$, let $\pi_i(\boldsymbol{v})$ ($i \in [d]$) be the ith component of $\boldsymbol{v}$. The *(two dimensional)* $m \times n$-*grid* denoted by $M(m, n)$ is the graph with vertex set $[m] \times [n]$ and edge set $\{(\boldsymbol{u}, \boldsymbol{v}) \mid \exists i \in [2]\ \pi_i(\boldsymbol{u}) = \pi_i(\boldsymbol{v}) \pm 1,\ \pi_j(\boldsymbol{u}) = \pi_j(\boldsymbol{v})\ (j \neq i)\}$. The vertex sets $\{i\} \times [n]$ and $[m] \times \{j\}$ of $M(m, n)$ are called the ith *column* and jth *row* and denoted by $(i, *)$ and $(*, j)$, respectively. $M(m, n)$ is called an m-*ladder* and denoted by $L(m)$ if $n = 2$.

A *caterpillar* C is a tree whose vertices with degree at least 2 induce a path. A *spine* of C is a path which contains as a subgraph the path induced by the vertices with degree at least 2 and has end-vertices with degree 1 or 2. An edge not contained in the spine is called a *leg*. Although a path P is a graph, P is also denoted by a sequence of all the vertices of P in which consecutive two vertices are adjacent.

An *embedding* $\langle \phi, \rho \rangle$ of a graph G into a graph H is defined by a one-to-one mapping $\phi : V(G) \to V(H)$, together with a mapping ρ that maps each edge $(u, v) \in E(G)$ onto a set of edges of H which induces a path connecting $\phi(u)$ and $\phi(v)$. The *(edge) congestion* of $\langle \phi, \rho \rangle$ is $\max_{e_H \in E(H)} |\{e_G \in E(G) \mid e_H \in \rho(e_G)\}|$. For $U \subseteq V(G)$, let $\phi(U) = \{\phi(v) \mid v \in U\}$. Also, let $\rho(S) = \bigcup_{e \in S} \rho(e)$ for $S \subseteq E(G)$. Moreover, for a subgraph G' of G, we define that $\langle \phi, \rho \rangle(G') = H[\rho(E(G'))]$. An embedding of a graph G into a two dimensional grid H is called a *layout* of G into H if it has unit congestion.

For a statement $\mathcal{P}$, let $I(\mathcal{P})$ be 1 if $\mathcal{P}$ is true, 0 otherwise.

3. Tree Layout into Ladder is in P

In this section, we prove Theorem 1 by a series of lemmas.

For a congestion-1 embedding $\varepsilon = \langle \phi, \rho \rangle$ of a graph G into a graph H and $s, t \in V(H)$, a *free track* of s to t is a path which connects s and t without an edge of $\rho(E(G))$.

3.1 Characterization

The following characterization can be derived from the results of [6] and [9].

Lemma 3: A tree T can be laid out into a ladder if and only if T has the maximum vertex degree at most 3, and there exists a path P in T such that each connected component of $T - V(P)$ is a caterpillar. □

By Lemma 3, we can easily construct a polynomial time algorithm which determines, given a tree T, whether T can be laid out into a ladder, and if so, outputs a path satisfying the condition of Lemma 3.

3.2 Subproblems

In this section, we introduce subproblems and show that the problems can be solved in polynomial time.

Lemma 4: For a layout $\varepsilon = \langle \phi, \rho \rangle$ of a path $(p_0, \ldots, p_{l-1})$ ($l \geq 4$) into a ladder, if $\pi_0(\phi(p_0)) = \min_{i \in [l]}\{\pi_0(\phi(p_i))\}$ and $\pi_0(\phi(p_{l-1})) = \max_{i \in [l]}\{\pi_0(\phi(p_i))\}$, then $\pi_0(\phi(v_i)) \leq \pi_0(\phi(v_j))$ for $0 < i < j < l - 1$.

Proof Let $0 < i < j < l - 1$, and let P, P', and P'' be edge-disjoint subpaths $(p_0, \ldots, p_i)$, $(p_i, \ldots, p_j)$, and $(p_j, \ldots, p_{l-1})$, respectively. If $\pi_0(\phi(p_j)) < \pi_0(\phi(p_i))$, then edge-disjoint graphs $\varepsilon(P)$, $\varepsilon(P')$, and $\varepsilon(P'')$ contain edges each of which joins a vertex of $(\pi_0(\phi(p_j)), *)$ and one of $(\pi_0(\phi(p_j)) + 1, *)$. However, this is impossible since there are just two such edges in a ladder. □

We assume throughout this section that graphs we consider have the maximum vertex degree at most 3.

Lemma 5: Problem 1 given below can be solved in polynomial time:

Problem 1:

Input A caterpillar C with a spine $S = (s_0, \ldots, s_{l-1})$.
Output The minimum value of m such that there exists a layout $\langle \phi, \rho \rangle$ of C into $L(m)$ in which $\phi(s_0)$ and $\phi(s_{l-1})$ have edge-disjoint free tracks to vertices of $(0, *)$ and $(m - 1, *)$, respectively.

Proof We show that Problem 1 can be solved in polynomial time by dynamic programming. Let C_i ($i \in [l]$) be the caterpillar induced by $s_0, \ldots, s_i$ and their legs. We define that $m(C_i, f)$ ($i \in [l]$, $f \in \{-1, 0, 1\}$) is the minimum value of m_f such that there exists a layout $\langle \phi_f, \rho_f \rangle$ of C_i into a ladder which satisfies the following conditions:

(i) $\langle \phi_0, \rho_0 \rangle$ is a layout of C_i into $L(m_0)$ in which $\phi_0(s_0)$ and $\phi_0(s_i)$ have edge-disjoint free tracks to a vertex of $(0, *)$ and one of $(m_0 - 1, *)$, respectively.
(ii) $\langle \phi_1, \rho_1 \rangle$ is a layout of C_i into $L(m_1)$ in which there exists $v \in V(L(m_1)) - \phi_1(V(C_i))$ such that $\phi_1(s_0)$, $\phi_1(s_i)$, and v have edge-disjoint free tracks to a vertex of $(0, *)$, one of $(m_1 - 1, *)$, and the other of $(m_1 - 1, *)$, respectively.
(iii) $\langle \phi_{-1}, \rho_{-1} \rangle$ is a layout of C_i into $L(m')$ ($m' \geq m_{-1}$) in which $\phi_{-1}(s_0)$ and $\phi_{-1}(s_i)$ have edge-disjoint

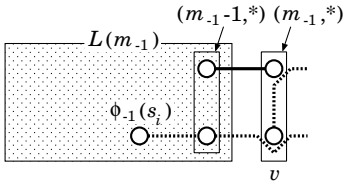

Fig. 1 Layout of C_i into $L(m_{-1}+1)$ which is obtained from a layout $\langle \phi_{-1}, \rho_{-1} \rangle$ satisfying (iii). Dotted lines are free tracks of $\phi_{-1}(s_i)$ and $v \in V(L(m_{-1}+1)) - \phi_{-1}(V(C_i))$.

free tracks to a vertex of $(0,*)$ and one of $(m_{-1}-1,*)$, respectively, and all the vertices and edges of C_i are mapped into $L(m_{-1})$ except at most one vertex and edge of a leg.

Since $m(C_{l-1}, 0)$ is the answer of Problem 1, it suffices to show that for each $i \in [l]$ and $f \in \{-1,0,1\}$, $m(C_i, f)$ can be computed in polynomial time. We prove this by a series of claims.

Claim 5.1: For $i \in [l]$, $m(C_i,-1) \le m(C_i,0) \le m(C_i,1) \le m(C_i,-1)+1$.

Proof It clearly follows by definition that $m(C_i,-1) \le m(C_i,0) \le m(C_i,1)$ for $i \in [l]$. Moreover, a layout of C_i which satisfies (ii) for $m_1 = m_{-1}+1$ can be obtained from a layout $\langle \phi_{-1}, \rho_{-1} \rangle$ of C_i which satisfies (iii) as shown in Fig. 1. This means that $m(C_i,1) \le m(C_i,-1)+1$. Therefore, we have the desired inequalities.

End of proof of Claim 5.1

We fix $0 < i < l$ and $f \in \{-1,0,1\}$ in the rest of the proof of the lemma. Let $\langle \phi', \rho' \rangle$ be a layout of C_i which satisfies (i), (ii), and (iii) for $m_f = m'$, where m' is a certain integer. We denote $\pi_0(\phi'(s_i))$ by x_i for simplicity. Let $L_1 = L(x_i)$ and let L_2 be a subgraph of $L(m')$ induced by $\bigcup_{x_i \le j \le m'-1}(j,*)$.

Now, we show a lower bound for m'. Let Λ be the set of vertices of S which are incident to legs.

Claim 5.2: If $x_{i-1} = x_i$ and $2 \le i < l$, then $m' \ge m(C_{i-2}, I(s_i \in \Lambda)) + 1 + I(I(s_{i-1} \in \Lambda) + f \ge 1)$.

Proof We first show a lower bound for x_i. It is not difficult to see that C_{i-2} are laid out into L_1 by a layout satisfying (ii) for $m_1 = x_i$ if $s_i \in \Lambda$, (i) for $m_0 = x_i$ otherwise. Thus, we have that $x_i \ge m(C_{i-2}, I(s_i \in \Lambda))$.

We next show a lower bound for $m' - x_i$. There exist two vertices $\phi'(s_{i-1})$ and $\phi'(s_i)$ in L_2. If $s_{i-1} \in \Lambda$ and $f \ge 0$, then the degree-1 vertex v adjacent to s_{i-1} is mapped to L_2. It should be noted that if $f = -1$, then we can map v to the outside of L_2. If $f = 1$, then there exists a vertex in L_2 which is guaranteed to have a free track. Thus, we have that $m' - x_i \ge 1 + I(I(s_{i-1} \in \Lambda) + f \ge 1)$. Therefore, we have the desired inequality.

End of proof of Claim 5.2

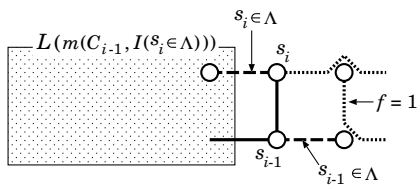

Fig. 2 Layout of C_i into $L(m(C_{i-2}, I(s_i \in \Lambda)) + 1 + I(I(s_{i-1} \in \Lambda) + f \ge 1))$.

Claim 5.3: If $x_{i-1} < x_i$, then $m' \ge m(C_{i-1}, \max\{I(s_i \in \Lambda) + f - 1, -1\}) + 1$.

Proof We first show a lower bound for x_i. It follows from the assumption on free tracks of $\phi'(s_0)$ and $\phi'(s_i)$ and Lemma 4 that $s_0, \ldots, s_{i-1}$ are mapped to L_1. Moreover, all the vertices of $V(C_i) - S$ are mapped to L_1 except at most one vertex. Thus, there exists $f' \in \{-1,0,1\}$ such that the layout of C_{i-1} by $\langle \phi', \rho' \rangle$ satisfies (i), (ii), and (iii) for $m_{f'} = x_i$. Therefore, we have that $x_i \ge m(C_{i-1}, f')$.

We next show a lower bound for $m' - x_i$. There exists $\phi'(s_i)$ in L_2. Moreover, there exist in L_2 other vertices corresponding to the cases $s_i \in \Lambda$, $f = 1$, and $f' = -1$, at most one of which can be mapped to the outside of L_2 if $f = -1$ or $f' = 1$. Thus, we have that $m' - x_i \ge 1 + I(I(s_i \in \Lambda) + f - f' \ge 2)$.

It follows from these lower bounds that $m' \ge m(C_{i-1}, f') + 1 + I(I(s_i \in \Lambda) + f - f' \ge 2)$. By Claim 5.1, the right hand side of the inequality is minimized when $f' = \min\{f'' \in \{-1,0,1\} \mid f''$ minimizes $I(I(s_i \in \Lambda) + f - f'' \ge 2)\} = \min\{f'' \in \{-1,0,1\} \mid I(s_i \in \Lambda) + f - f'' \le 1\} = \max\{I(s_i \in \Lambda) + f - 1, -1\}$. Thus, we have the desired inequality.

End of proof of Claim 5.3

It follows from Lemma 4 and the assumption on free tracks of $\phi'(s_0)$ and $\phi'(s_i)$ that $x_{i-1} \le x_i$. Moreover, for both conditions of $x_{i-1} = x_i$ and $x_{i-1} < x_i$, we can construct layouts of C_i which achieve the lower bounds of Claims 5.2 and 5.3 as shown in Figs. 2 and 3, respectively, if we have for each $j \in \{i-1, i-2\}$ and $f' \in \{-1,0,1\}$, a layout of C_j which satisfies (i), (ii), and (iii) for $m_{f'} = m(C_j, f')$. Thus, $m(C_i, f)$ is the smaller value of the lower bounds of Claims 5.2 and 5.3 and hence can be computed in polynomial time by dynamic programming.

□

Lemma 6: Problem 2 given below can be solved in polynomial time:

Problem 2:

Input Caterpillars C, C^{L}, and C^{R} with spines $S = (s_0, \ldots, s_{l-1})$, $S^{\mathrm{L}} = (s'_0, \ldots, s'_{h-1})$ $(h \ge 1)$, and $S^{\mathrm{R}} = (s'_h, \ldots, s'_{k-1})$ $(k - h \ge 1)$, respectively.

Output The minimum value of m such that there exists a layout $\langle \phi, \rho \rangle$ of $C \cup C^{\mathrm{L}} \cup C^{\mathrm{R}}$ into $L(m)$

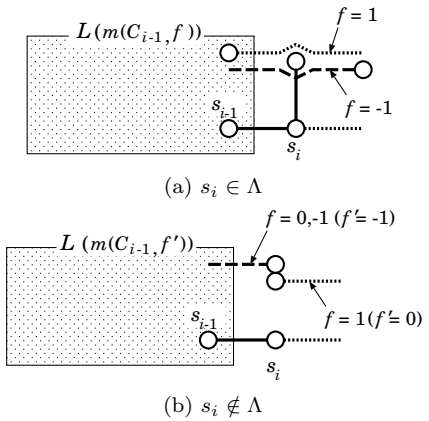

Fig. 3 Layout of C_i into $L(m(C_{i-1}, \max\{I(s_i \in \Lambda) + f - 1, -1\}) + 1)$.

in which $\phi(s_0)$, $\phi(s'_0)$, $\phi(s_{l-1})$, and $\phi(s'_{k-1})$ have edge-disjoint free tracks to a vertex of $(0, *)$, the other of $(0, *)$, one of $(m-1, *)$, and the other of $(m-1, *)$, respectively.

Proof We may assume without loss of generality that $\deg_{C^{\mathrm{L}}}(s'_{h-1}) = \deg_{C^{\mathrm{R}}}(s'_h) = 1$. Let $U \subseteq V(S)$ and $U' \subseteq V(S^{\mathrm{L}}) \cup V(S^{\mathrm{R}})$ be the sets of vertices not incident to legs. We assume that $U = \{u_0, \ldots, u_{l'-1}\}$ such that u_j $(j \in [l'])$ be the jth vertex of U in the sequence $(s_0, \ldots, s_{l-1})$, and $U' = \{u'_0, \ldots, u'_{h'-1} = s'_{h-1}, u'_{h'} = s'_h, \ldots, u'_{k'-1}\}$ such that u'_j $(j \in [k'])$ be the jth vertex of U' in the sequence $(s'_0, \ldots, s'_{k-1})$.

If $k' = l'$, then we can obtain an optimal layout by mapping u_j $(j \in [l'])$ and u'_j to the same column as shown in (a) of Fig. 4. It should be noted that we can obtain an optimal layout in the same fashion also for the case that $k' - l' = 1$.

If $k' - l' \in \{2, 3\}$, then we can obtain an optimal layout by mapping pairs of vertices u_j and u'_j for $j \in [h'-1]$, $u'_{h'-1}$ and $u'_{h'}$, and u_j and u'_{j+2} for $h'-1 \leq j < l'$ to the same columns ((b) of Fig. 4).

Assume that $k' - l' \geq 4$. If $\{s'_{h-2}, s'_{h+1}\} \not\subseteq U'$, then a layout obtained in the same fashion as that for the case that $k' - l' \in \{2, 3\}$ is optimal since S, S^{L}, or S^{R} can "bend" no longer. On the other hand, if $\{s'_{h-2}, s'_{h+1}\} \subseteq U'$, then we can obtain a better and optimal layout by mapping pairs of vertices u_j and u'_j for $j \in [\min\{h'-2, l'\}]$, u'_j and u'_{j+1} for $j \in \{h'-2, h'\}$, and u_j and u'_{j+4} for $h'-2 \leq j < l'$ to the same columns ((c) and (d) of Fig. 4). Thus, for the case that $k' \geq l'$, we can compute the answer of Problem 2 in polynomial time.

It remains the case that $k' < l'$. Let $\overline{C}$ be the subcaterpillar which has the spine connecting s_x and s_y and all the legs of the spine, where x and y are integers such that $s_{x-1} = u_{h'-1}$ and $s_{y+1} = u_{h'+(l'-k')}$, respectively. We can obtain an optimal layout by mapping pairs of vertices u_j and u'_j for $j \in [h']$ and u_j and $u'_{j-(l'-k')}$ for $h' + (l' - k') \leq j < l'$, and by laying out $\overline{C}$ by solving Problem 1 for the input of $\overline{C}$ (Fig. 5). Thus, Problem 2 can be solved in polynomial time. □

3.3 Main Proof

In what follows, we assume that T is a tree which has a path P satisfying the condition of Lemma 3. Let $C'_1, \ldots, C'_r$ be connected components of $T - V(P)$ each of which has at least one edge. Let $a_i \in V(P)$ $(1 \leq i \leq r)$ be the vertex adjacent to a vertex a'_i of C'_i. Suppose that $P = (a_0, \ldots, a_1, \ldots, a_2, \ldots, a_r, \ldots, a_{r+1})$. We may assume without loss of generality that neither a_0 and a_1 nor a_r and a_{r+1} are adjacent. Let C_i $(0 \leq i \leq r)$ be the subgraph of T which is induced by the vertices of the subpath $P_i = (a_i, \ldots, a_{i+1})$ of P and degree-1 vertices adjacent to vertices of $V(P_i) - \{a_i, a_{i+1}\}$ (Fig. 6).

The following lemma can be seen from the fact that a ladder has the maximum vertex degree at most 3.

Lemma 7: Let $\langle \phi, \rho \rangle$ be a layout of a graph G into a ladder H. If there exists $(u, v) \in E(G)$ such that $\deg_G(u) \geq 2$, $\deg_G(v) \geq 2$, and $\rho((u, v))$ contains an edge joining vertices of a column, then either $\pi_0(\phi(u)) \leq \min_{\boldsymbol{v} \in V(\langle \phi, \rho \rangle(G'))}\{\pi_0(\boldsymbol{v})\}$ or $\pi_0(\phi(u)) \geq \max_{\boldsymbol{v} \in V(\langle \phi, \rho \rangle(G'))}\{\pi_0(\boldsymbol{v})\}$ for any connected subgraph G' of $G - \{u, v\}$. □

Lemma 8: We can compute in polynomial time the minimum integer m such that there exists a layout $\langle \phi, \rho \rangle$ of T into $L(m)$.

Proof From the regularity of the ladder, we may assume without loss of generality that $\pi_0(\phi(a_1)) \leq \pi_0(\phi(a_r))$. Since $\deg_T(a_i) = 3$ $(1 \leq i \leq r-1)$, there exists an edge e_i incident to a_i such that $\rho(e_i)$ contains the edge joining vertices of $(\pi_0(a_i), *)$. Since every vertex adjacent to a_i has degree 2 or more, it follows from Lemma 7 that $\pi_0(\phi(a_i)) \leq \pi_0(\phi(a_{i+1}))$ for $1 \leq i \leq r-1$.

It is not difficult to see that for each $1 \leq i \leq r-1$, there are at most eight possibilities for layout patterns around a_i as shown in Fig. 7 and that if the layout patterns for a_i and a_{i+1} are fixed, then the subgraph to be laid out into $\bigcup_{j=\pi_0(\phi(a_i))}^{\pi_0(\phi(a_{i+1}))}(j, *)$ are also fixed by Lemma 7. This means that for $1 \leq i \leq r-1$, the minimum value of $\pi_0(\phi(a_{i+1})) - \pi_0(\phi(a_i))$ is determined by the layout patterns for a_i and a_{i-1}. Similarly, the minimum values of $\pi_0(\phi(a_1))$ and $m - 1 - \pi_0(\phi(a_r))$ are determined by the layout patterns for a_1 and a_r, respectively. Thus, if these minimum values can be computed in polynomial time for each possible combination for the layout patterns, then the minimum value of their total, i.e., m can also be computed in polynomial time by dynamic programming.

Since the problem of computing the minimum value of $\pi_0(\phi(a_{i+1})) - \pi_0(\phi(a_i))$ $(1 \leq i \leq r-1)$ can

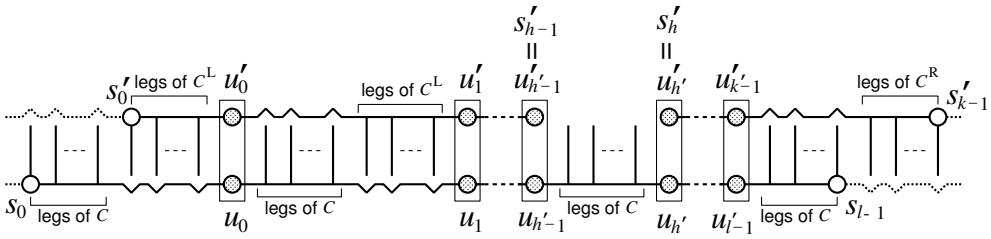

(a) $k' = l'$.

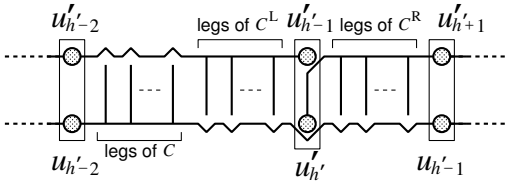

(b) $k' - l' = 2$.

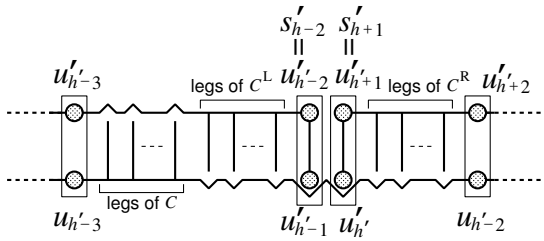

(c) $h' - 2 \le l' \le k' - 4$ and $\{s'_{h-2}, s'_{h+1}\} \subseteq U'$.

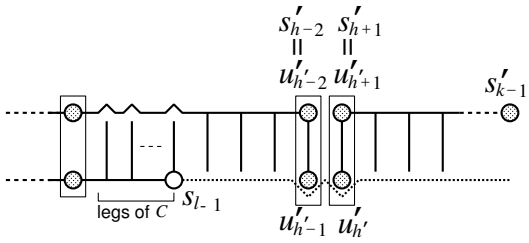

(d) $l' < h' - 2$ and $\{s'_{h-2}, s'_{h+1}\} \subseteq U'$.

Fig. 4 Layouts for the case that $k' \ge l'$.

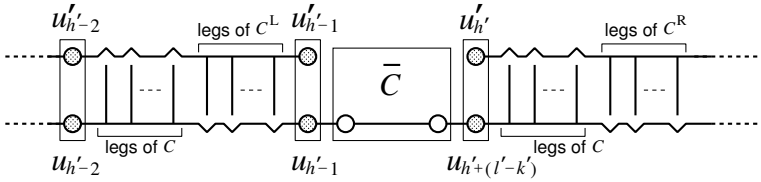

Fig. 5 Layout for the case that $k' < l'$.

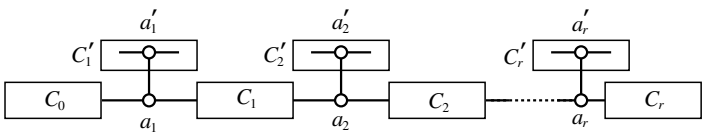

Fig. 6 Tree which can be laid out into a ladder.

be reduced to Problems 1 or 2†, the value can be computed in polynomial time by Lemmas 5 and 6.

If $r > 1$, then the minimum value of $\pi_0(\phi(a_1))$ can be computed by setting each vertex of $V(C_0) - \{a_1\}$ to that to be mapped to $(0, *)$ and by applying the algorithm for Problem 1 or 2. If $r = 1$, then the value can be computed by setting every pair of distinct vertices of $V(C_0) - \{a_1\}$ to those to be mapped to both the end-columns of the ladder and by applying the algorithm for Problem 1 or 2. In either case, however, the required value can be computed in polynomial time. The minimum value of $m - 1 - \pi_0(\phi(a_r))$ can also be computed in a similar fashion.

Therefore, m can be computed in polynomial time.

†Indeed, for the layout patterns (d) and (e), it is necessary to extend Problem 2 so that a different boundary condition on free tracks is adopted and that the empty graphs are allowed for C^{L} and C^{R}. However, we can easily extend the result of Lemma 6 also for the extended version of Problem 2.

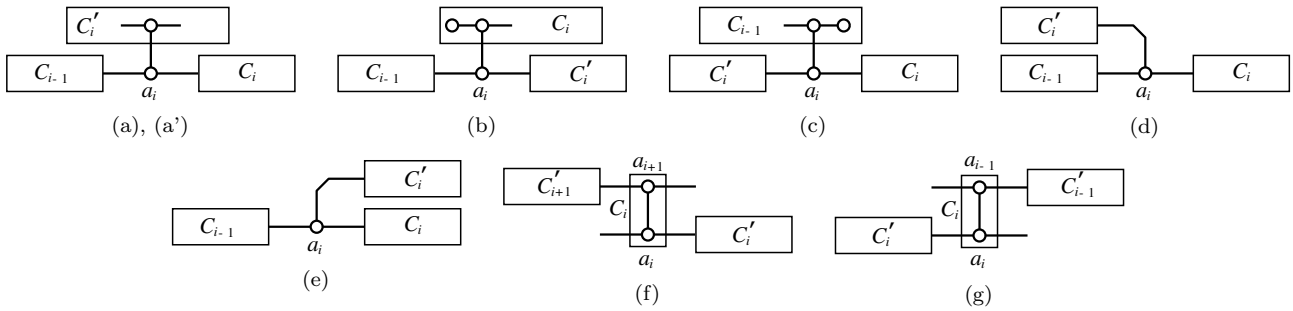

Fig. 7 Eight possibilities for layout patterns around a_i. (a') is one obtained from (a) by reverting C'_i horizontally.

□

This completes the proof of Theorem 1.

4. NP-completeness of Acyclic Graph Layout into Ladder

In this section, we prove Theorem 2 by constructing a pseudo-polynomial reduction from 3-Partition, which is well known to be NP-complete in the strong sense [2], to Graph 2-Layout. 3-Partition is defined as follows:

3-Partition

Instance A set of $3r$ integers $A = \{a_0, a_1, \ldots, a_{3r-1}\}$ and a positive integer b such that $b/4 < a_l < b/2$ and $\sum_{l\in[3r]} a_l = rb$.

Question Can A be partitioned into r disjoint sets $A_0, \ldots, A_{r-1}$ such that $\sum_{a\in A_i} a = b$ for $i \in [r]$?

4.1 Translation of Instance

For integers $a_0, \ldots, a_{3r-1}$, and b given as an instance of 3-Partition, we construct an instance of Graph 2-Layout as follows:

(1) Definition of G:

(i) We define the $2\lambda^Z$-vertex graph Z and the vertices z, z' and t of Z as shown in Fig. 8 (a), where $\lambda^Z = 5$.

(ii) We define that W is a $(2\lambda^W - \alpha b)$-vertex caterpillar which has a spine $(s_0, \ldots, s_{\lambda^W-1})$ and legs incident to s_{4j} for $j \in [\lceil \lambda^W/4 \rceil]$, where $\lambda^W = 4\alpha b/3+1$ and $\alpha = 48$ (Fig. 8 (b)). Let w and w' denote s_0 and s_{λ^W-1}, respectively.

(iii) Let $Z_0, \ldots, Z_r$ be $r+1$ copies of Z and let $W_0, \ldots, W_{r-1}$ be r copies of W. We denote z, z', and t of Z_i ($i \in [r+1]$) by z_i, z'_i, and t_i, respectively, and w and w' of W_i ($i \in [r]$) by w_i and w'_i, respectively.

(iv) F is the graph obtained from $Z_0, \ldots, Z_r$ and $W_0, \ldots, W_{r-1}$ by adding edges (z'_i, w_i) and (w'_i, z_{i+1}) for $i \in [r]$ (Fig. 8 (c)).

(v) For $l \in [3r]$, P_l is a path with αa_l vertices.

(vi) We define that $G = F \cup \bigcup_{l\in[3r]} P_l$.

(2) Definition of m:

We define that $m = (\lambda^Z + \lambda^W)r + \lambda^Z = (64b+6)r+5$.

4.2 Correspondence of Answers

Now we show that A can be partitioned into disjoint sets $A_0, \ldots, A_{r-1}$ such that $\sum_{a\in A_i} a = b$ for $i \in [r]$ if and only if there exists a layout of G into $H = L(m)$.

We first show the necessity by showing the following lemma:

Lemma 9: If A can be partitioned into disjoint sets $A_0, \ldots, A_{r-1}$ such that $\sum_{a\in A_i} a = b$ for $i \in [r]$, then there exists a layout of G into H.

Proof W has a spine with $\lambda^W = 4\alpha b/3+1$ vertices and $\lceil \lambda^W/4 \rceil = \alpha b/3+1$ legs. Thus, we can layout W and an αb-vertex path into $L(\lambda^W)$ as shown in Fig. 9. Z can clearly be laid out into $L(\lambda^Z)$ by definition. Therefore, if A can be partitioned into disjoint sets $A_0, \ldots, A_{r-1}$ such that $\sum_{a\in A_i} a = b$ for $i \in [r]$, then we can layout G into H by laying out Z_i ($i \in [r+1]$) into $\bigcup_{x\in[\lambda^Z]}((\lambda^Z + \lambda^W)i + x, *)$, and W_i ($i \in [r]$) and P_l ($l \in [3r]$ with $a_l \in A_i$) into $\bigcup_{x\in[\lambda^Z]}((\lambda^Z + \lambda^W)i + \lambda^Z + x, *)$ as shown in Fig. 10. □

It remains to show that the sufficiency. Assume that there exists a layout $\varepsilon = \langle \phi, \rho \rangle$ of G into H. We show by a series of lemmas that A can be partitioned into disjoint sets as desired.

For a subgraph G' of G, let $\xi^{\min}(G') = \min\{\pi_0(\boldsymbol{v}) \mid \boldsymbol{v} \in V(\varepsilon(G'))\}$ and $\xi^{\max}(G') = \max\{\pi_0(\boldsymbol{v}) \mid \boldsymbol{v} \in V(\varepsilon(G'))\}$. For $i \in [r]$, let $U_i = \bigcup_{\xi^{\min}(W_i)<x<\xi^{\max}(W_i)}(x, *)$, $\lambda_i = \xi^{\max}(W_i) - \xi^{\min}(W_i) + 1$, and $S_i = \{l \in [3r] \mid V(\varepsilon(P_l)) \cap U_i \neq \emptyset\}$. Suppose that $(p_0, \ldots, p_{m-1})$ is the path of F which connects z_0 and z'_r. From the regularity of H, we may assume without loss of generality that $\pi_0(\phi(t_0)) \leq \pi_0(\phi(t_r))$.

The following lemma can easily be checked from the fact that H has the maximum vertex degree at most 3 and that ε has unit congestion.

Lemma 10: Let $u, v \in V(G)$. If $\deg_G(u) = 3$,

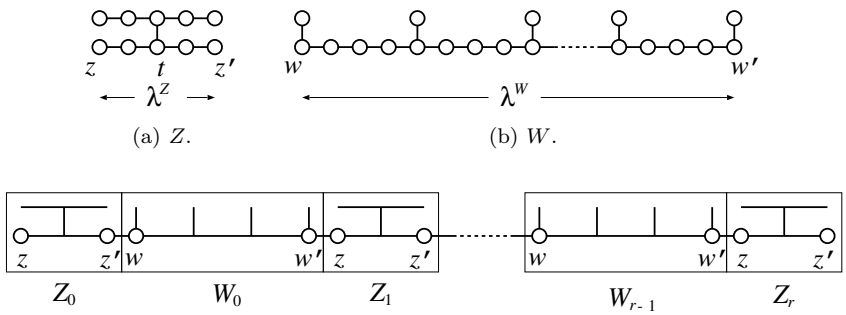

(a) Z. (b) W.

(c) F.

Fig. 8 Definition of F.

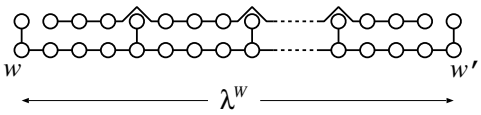

Fig. 9 Layout of W and an αb-vertex path into $L(\lambda^W)$.

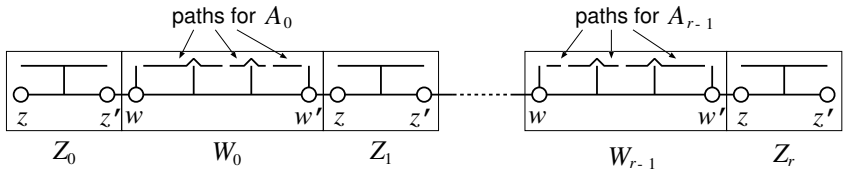

Fig. 10 Layout of G into H.

$\deg_G(v) \geq 2$, and $(\phi(u), \phi(v)) \in E(H)$, then $(u, v) \in E(G)$ and $\rho((u, v)) = \{(\phi(u), \phi(v))\}$. □

Lemma 11: For $i \in [r+1]$ and a connected subgraph G' of $G - V(Z_i)$, either $\xi^{\max}(G') \leq \pi_0(\phi(t_i))$ or $\xi^{\min}(G') \geq \pi_0(\phi(t_i))$.

Proof Since t_i is adjacent three vertices with degree at least 2, there exists a vertex v adjacent to t_i such that $\rho((t_i, v))$ contains the edge joining vertices of $(\pi_0(\phi(t_i)), *)$. Thus, the lemma holds by Lemma 7. □

Lemma 12: $\pi_0(\phi(p_i)) \leq \pi_0(\phi(p_j))$ for $2 \leq i < j \leq m-3$.

Proof It should be noted that p_2 and p_{m-3} are t_0 and t_r, respectively. By Lemma 11 and the assumption that $\pi_0(\phi(t_0)) \leq \pi_0(\phi(t_r))$, we have that $\pi_0(\phi(p_2)) \leq \pi_0(\phi(p_i)) \leq \pi_0(\phi(p_{m-3}))$ for $2 < i < m-3$. Thus, it follows from Lemma 4 that $\pi_0(\phi(p_i)) \leq \pi_0(\phi(p_j))$ for $2 \leq i < j \leq m-3$. □

Lemma 13: $\xi^{\max}(W_i) \leq \pi_0(\phi(t_{i+1})) \leq \xi^{\min}(W_{i+1})$ for $i \in [r-1]$, i.e., $U_0, \ldots, U_{r-1}$ are disjoint.

Proof Immediate from Lemmas 11 and 12. □

Lemma 14: $S_0, \ldots, S_{r-1}$ are disjoint.

Proof Immediate from Lemmas 11 and 13. □

Lemma 15: For $i \in [r]$, if $\delta = \lambda^W - \lambda_i > 0$, then $|S_i| \geq \delta/2 - 1$.

Proof We fix $i \in [r]$ and assume that $\delta = \lambda^W - \lambda_i > 0$. Let $q_k = p_{(\lambda^Z + \lambda^W)i + \lambda^Z + 4k}$ for $k \in [(\lambda^W - 1)/4 + 1]$, i.e., $q_0, \ldots, q_{(\lambda^W - 1)/4}$ are the vertices incident to legs of W_i. Let Q_k be the path connecting q_k and q_{k+1} for $k \in [(\lambda^W - 1)/4]$. $Q_0, \ldots, Q_{(\lambda^W - 1)/4 - 1}$ are called *segments*. An edge $(u, v) \in E(G)$ is called a *barrier* if $\deg_G(u) \geq 2$, $\deg_G(v) \geq 2$, and $\pi_0(\phi(u)) = \pi_0(\phi(v))$. We prove the lemma by a series of claims.

Claim 15.1: $\pi_0(\phi(q_{k+1})) - \pi_0(\phi(q_k)) \geq 3$ for $k \in [(\lambda^W - 1)/4]$.

Proof Since Q_k has five vertices, it follows from Lemma 12 that $\pi_0(\phi(q_{k+1})) - \pi_0(\phi(q_k)) \geq 2$. Thus, it suffices to show that $\pi_0(\phi(q_{k+1})) - \pi_0(\phi(q_k)) \neq 2$. We prove this by contradiction. Assume that $\pi_0(\phi(q_{k+1})) - \pi_0(\phi(q_k)) = 2$. We denote Q_k by $(q_k, v_1, v_2, v_3, q_{k+1})$ for simplicity. Moreover, we assume without loss of generality that $\pi_1(\phi(q_k)) = 0$.

Since v_2 is adjacent to neither q_k nor q_{k+1}, $\phi(v_2)$ is adjacent to neither $\phi(q_k)$ nor $\phi(q_{k+1})$ by Lemma 10. Thus, we have that $\phi(v_2) = (\pi_0(\phi(q_k)) + 1, 1)$ and $\phi(q_{k+1}) = (\pi_0(\phi(q_k)) + 2, 0)$. Therefore, if a degree-2 vertex of G is mapped to $(\pi_0(\phi(q_k)) + 1, 0)$, then the vertex is adjacent to both q_k and q_{k+1} by Lemma 10. However, there are no such vertices in F. Thus, no vertex

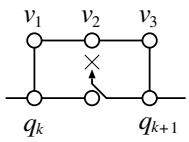

Fig. 11 Impossibility of layout of Q_k into a 3-ladder.

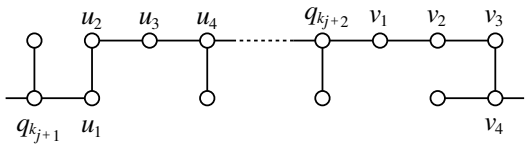

Fig. 12 Layout of $Q_{k_{j+1}}$ and $Q_{k_{j+2}}$ for $h = 0$ and $l = 3$.

with degree 2 is mapped to $(\pi_0(\phi(q_k))+1, 0)$, and hence $\phi(v_1) = (\pi_0(\phi(q_k)), 1)$ and $\phi(v_3) = (\pi_0(\phi(q_{k+1})), 1)$. Therefore, a degree-1 vertex incident to one of two legs of q_k and q_{k+1} is mapped to $(\pi_0(\phi(q_k)) + 1, 0)$. However, we cannot layout the other leg anywhere (Fig. 11), a contradiction. *End of proof of Claim 15.1*

Claim 15.2: There exist at least δ segments which contain barriers.

Proof W_i contains a λ^W-vertex path, which is embedded into a $(\lambda^W - \delta)$-ladder. Each segment is a 5-vertex path, which can be embedded into a 4-ladder but not into a 3-ladder by Claim 15.1. Thus, there exist at least δ segments which is embedded into a 4-ladder. Such a segment clearly has at least one barrier.

End of proof of Claim 15.2

Let $k_0, \ldots, k_{\delta-1}$ be integers such that $k_0 < k_1 < \cdots < k_{\delta-1}$ and Q_{k_j} $(j \in [\delta])$ has a barrier e_j. Suppose that the two vertices incident to e_j are mapped into $(x_j, *)$ for $j \in [\delta]$.

Claim 15.3: For $j \in [\delta - 2]$, there exists a vertex $\boldsymbol{u} \in \bigcup_{x_j<x<x_{j+2}}(x, *) - \phi(V(F))$ of H.

Proof We denote $Q_{k_{j+1}}$ by $(u_0 = q_{k_{j+1}}, u_1, u_2, u_3, u_4 = q_{k_{j+1}+1})$ for simplicity and suppose that $e_{j+1} = (u_h, u_{h+1})$ $(h \in [3])$.

We first consider the case that $h \leq 1$. Suppose that $Q_{k_{j+2}} = (v_0 = q_{k_{j+2}}, v_1, v_2, v_3, v_4 = q_{k_{j+2}+1})$ and $e_{j+2} = (v_l, v_{l+1})$ $(l \in [3])$. Figure 12 shows a layout of $Q_{k_{j+1}}$ and $Q_{k_{j+2}}$.

Let $X = \bigcup_{x_{j+1}<x<x_{j+2}}(x, *)$ and let Y be the vertices of F which is mapped to X. By Lemmas 7 and 12, Y consists of the following vertices:

(i) vertices of the path connecting u_{h+1} and v_l, except u_{h+1} and v_l;
(ii) degree-1 vertices incident to legs of the path of (i);
(iii) degree-1 vertex incident to the leg of u_0 if $h = 0$;
(iv) degree-1 vertex incident to the leg of v_4 if $l = 3$.

Thus, we have that $|Y| = 4 - (h+2) + 4(k_{j+2} - k_{j+1} - 1) + l + k_{j+2} - k_{j+1} - I(l = 0) + I(h = 0) + I(l = 3) = 5(k_{j+2} - k_{j+1}) + l - h - 2 - I(l = 0) + I(h = 0) + I(l = 3)$. On the other hand, $|X| = 2(x_{j+2} - x_{j+1}) \geq 2(4 - (h + 2) + 4(k_{j+2} - k_{j+1} - 1) + l) = 8(k_{j+2} - k_{j+1}) + 2(l - h) - 4$. It follows that $|X| - |Y| = 3(k_{j+2} - k_{j+1}) + l - h - 2 + I(l = 0) - I(h = 0) - I(l = 3) \geq 1$. Therefore, there exists at least one vertex in X which is not contained in $\phi(V(F))$.

For the case that $h \geq 2$, we can show by a similar argument that there exists at least one vertex in $\bigcup_{x_j<x<x_{j+1}}(x, *) - \phi(V(F))$, and omit the proof.

End of proof of Claim 15.3

By Claim 15.3, there exist distinct vertices $\boldsymbol{u}_0, \ldots, \boldsymbol{u}_{\lfloor(\delta-1)/2\rfloor-1}$ of H such that $\boldsymbol{u}_j \in \bigcup_{x_{2j}<x<x_{2j+2}}(x, *) - \phi(V(F))$ for $j \in [\lfloor(\delta - 1)/2\rfloor]$. Thus, it follows from Lemma 7 and the fact that $|V(G)| = |V(H)|$ that at least $\lfloor(\delta - 1)/2\rfloor$ distinct paths of $P_0, \ldots, P_{3r-1}$ are mapped in U_i. Therefore, $|S_i| \geq \lfloor(\delta - 1)/2\rfloor \geq \delta/2 - 1$. □

Lemma 16: $\sum_{l \in S_i} a_l = b$ for $i \in [r]$.

Proof By Lemma 14, it suffices to show that $\sum_{l \in S_i} a_l \geq b$ for every $i \in [r]$. We prove this by contradiction. Assume that there exists $i \in [r]$ such that $\sum_{l \in S_i} a_l \leq b - 1$.

It follows from Lemmas 11 and 13 that $|U_i| \leq |V(W)| + 2|V(Z)| + \sum_{l \in S_i} |V(P_l)| = 2L^W - \alpha b + \alpha \sum_{l \in S_i} a_l + 4\lambda^Z = 2L^W - (48(b - \sum_{l \in S_i} a_l) - 20)$. Thus, we have that $\lambda_i = |U_i|/2 + 2 \leq L^W - (24(b - \sum_{l \in S_i} a_l) - 12)$. Since $\sum_{l \in S_i} a_l \leq b - 1$, it follows from Lemma 15 that $|S_i| \geq (24(b - \sum_{l \in S_i} a_l) - 12)/2 - 1 = 12(b - \sum_{l \in S_i} a_l) - 7$. Thus, $\sum_{l \in S_i} a_l > |S_i|b/4 \geq (12(b - \sum_{l \in S_i} a_l) - 7)b/4$. Therefore, we have that $\sum_{l \in S_i} a_l > \frac{(12b-7)b}{12b+4} = b - \frac{11}{12+4/b} > b - 1$, a contradiction.

□

Lemmas 14 and 16 complete the proof for the sufficiency.

Since $|V(G)| = O(br)$, we have obtained a pseudo-polynomial reduction from 3-Partition to Graph 2-Layout. Moreover, Graph k-Layout is in NP for a positive integer k [7]. Therefore, Graph 2-Layout is NP-complete, which completes the proof of Theorem 2.

References

[1] M. Formann and F. Wagner, "The VLSI layout problem in various embedding models," Graph-Theoretic Concepts in Computer Science (R. H. Möhring, ed.), vol. 484 of *Lecture Notes in Computer Science*, pp. 130–139, Springer-Verlag, Berlin, 1991.
[2] M. R. Gary and D. S. Johnson, "Computers and intractability," W. H. Freeman and Company, New York, 1979.

[3] Y. M. Kim and T.-H. Lai, "The complexity of congestion-1 embedding in a hypercube," J. Algorithms, vol. 12, pp. 246–280, 1991.
[4] M. R. Kramer and J. van Leeuwen, "The complexity of wire-routing and finding minimum area layouts for arbitrary VLSI circuits," Advances in Computing Research (F. P. Preparata, ed.), vol. 2, pp. 129–146, 1984.
[5] S.-K. Lee and H.-A. Choi, "Embedding of complete binary trees into meshes with row-column routing," IEEE Trans. Parallel Dist. Systems, vol. 7, no. 5, pp. 493–497, May 1996.
[6] A. Matsubayashi and S. Ueno, "On the complexity of embedding of graphs into grids with minimum congestion," IEICE Trans. Fundamentals, vol. E79-A, no. 4, pp. 469–476, April 1996.
[7] A. Matsubayashi and M. Yokota, "The complexity of embedding of acyclic graphs into grids with minimum congestion," IEICE Trans. Fundamentals, vol. E83-A, no. 11, pp. 2390–2394, November 2000.
[8] L. M. Ni and P. K. McKinley, "A survey of wormhole routing techniques in direct networks," Computer, vol. 26, no. 2, pp. 62–76, 1993.
[9] S. Tayu and S. Ueno, "Efficient embeddings of binary trees with bounded proper pathwidth into paths and grids," IEICE Trans. Fundamentals, vol. E80-A, no. 1, pp. 183–192, January 1997.

Akira Matsubayashi received the B.E. degree in electrical and electronic engineering in 1991, M.E. degree in intelligence science in 1993, and D.E. degree in electrical and electronic engineering in 1996 all from Tokyo Institute of Technology, Tokyo, Japan. From 1996 to 2000, he was a research associate in the Department of Information Science at Utsunomiya University, Utsunomiya, Japan. Currently, he is a research associate in the Department of Information and Systems Engineering at Kanazawa University, Kanazawa, Japan. His research interests are in parallel and VLSI computation. He is a member of the ACM, SIAM, and the Information Processing Society of Japan.