VLSI Layout of Trees into Grids of Minimum Width

メタデータ	言語: English 出版者: 公開日: 2017-10-03 キーワード (Ja): キーワード (En): 作成者: Matsubayashi, Akira メールアドレス: 所属:
URL	http://hdl.handle.net/2297/3537

PAPER *Special Section on Discrete Mathematics and Its Applications*

VLSI Layout of Trees into Grids of Minimum Width*

Akira MATSUBAYASHI†, ***Member***

SUMMARY

In this paper we consider the VLSI layout (i.e., Manhattan layout) of graphs into grids with minimum *width* (i.e., the length of the shorter side of a grid) as well as with minimum area. The layouts into minimum area and minimum width are equivalent to those with the largest possible aspect ratio of a minimum area layout. Thus such a layout has a merit that, by "folding" the layout, a layout of *all possible* aspect ratio can be obtained with increase of area within a small constant factor. We show that an N-vertex tree with *layout-width* k (i.e., the minimum width of a grid into which the tree can be laid out is k) can be laid out into a grid of area $O(N)$ and width $O(k)$. For binary tree layouts, we give a detailed trade-off between area and width: an N-vertex binary tree with layout-width k can be laid out into area $O(\frac{k+\alpha}{1+\alpha}N)$ and width $k+\alpha$, where α is an arbitrary integer with $0 \le \alpha \le \sqrt{N}$, and the area is existentially optimal for any $k \ge 1$ and $\alpha \ge 0$. This implies that $\alpha = \Omega(k)$ is essential for a layout of a graph into optimal area. The layouts proposed here can be constructed in polynomial time. We also show that the problem of laying out a given graph G into given area and width, or equivalently, into given length and width is NP-hard even if G is restricted to a binary tree.

key words: *VLSI layout, graph layout, graph embedding, tree, grid, aspect ratio, cutwidth*

1. Introduction

A *layout* of a graph into a rectangular grid is a one-to-one mapping of vertices of the graph onto points in the grid, together with a mapping of each edge of the graph onto a path in the grid which connects two points onto which the vertices incident to the edge are mapped. The problem of laying out graphs into rectangular grids with minimum area (i.e., the number of points) has been studied as a fundamental formulation for the problems such as VLSI layout and efficient computation on a parallel computer system whose processors are interconnected by a mesh network.

In this paper we consider the layout of graphs into grids with minimum *width* (i.e., the length of the shorter side of a grid) as well as with minimum area under restricted edge-disjoint routing called *Manhattan model*, which is applicable to VLSI layout. The layouts into minimum area and minimum width are equivalent to those with the largest possible aspect ratio of a minimum area layout. Thus such a layout has merits that, by "folding" the layout, we can obtain a layout of *all possible* aspect ratio with increase of area within a small constant factor. Similarly the layout with minimum width can be flexibly folded to a layout into non-rectangle, such as L- and U-shape. What is noteworthy is that the increase of area caused by such transformation is suppressed to the minimum when the width is minimum. In addition we consider minimization of the width of an underlying grid not for a class of graphs to be laid out but for each graph of the class.

1.1 Previous Related Results

1.1.1 Layout into Large Aspect Ratio

Many results on layouts of various classes of graphs, such as planar graphs and trees, with efficient area and small aspect ratio of $O(1)$ have been reported (e.g., [2], [6], [8], [13], [17], [25]). Layouts with efficient area and large aspect ratio was examined in [3], [4], [11].

Czerwinski and Ramachandran [4] showed that for various classes characterized by separator and bifurcator (see e.g., [20]), an N-vertex graph in such a class can be laid out into a grid of area $O(N)$ and aspect ratio $\Omega(r(N))$ with optimal dilation (i.e., maximum length of an image path), where $r(N)$ is the existentially maximum aspect ratio, i.e., the maximum aspect ratio for *all* the N-vertex graphs of the class to be laid out in area $O(N)$. In particular the result implies that an N-vertex tree can be laid out into a grid of area $O(N)$ and aspect ratio $\Omega(\frac{N}{\log^2 N})$.

In [3] and [12], planar layouts (i.e., internally node-disjoint layouts) of N-vertex binary trees into aspect ratio $\Omega(\frac{N \log\log N}{\log^2 N})$ and $\Omega(\frac{N}{\log N})$ but into larger area of $O(N \log\log N)$ and $O(N \log N)$, respectively, are given.

1.1.2 Complexity

The decision problem with respect to the area-efficient layout can be formalized as follows:

Area-Efficient Layout
Instance A graph G and an integer n.
Question Does there exist a grid of area n into which G can be laid out?

Manuscript received August 21, 2003.
Manuscript revised November 24, 2003.

†The author is with the Faculty of Engineering, Kanazawa University, Kanazawa, 920-8667 Japan.

*A preliminary version of this paper appeared in Proc. 15th Annual ACM Symposium on Parallelism in Algorithms and Architectures, pp. 75–84, 2003.

It is known that Area-Efficient Layout is NP-complete under each of edge-disjoint model and Manhattan model even if G is restricted to a connected planar graph [10]. It is also known that Area-Efficient Layout is NP-complete under planar routing model even if G is restricted to a connected planar graph [21], and even if G is restricted to a forest [7]. However we do not know the complexity of Area-Efficient Layout in which G is restricted to a tree under any of the three routing models, unless another strong criterion such as dilation is considered [1], [14]. It should be noted that the NP-hardness for a certain routing model does *not* imply the NP-hardness for another routing model. Moreover relaxation of the routing condition from node-disjointness to edge-disjointness is likely to complicate the complexity analysis drastically.

1.2 Our Results

1.2.1 Layout-Width

We call the minimum width of a grid into which a graph G can be laid out the *layout-width* of G. We give a necessary and sufficient condition for a binary tree to have layout-width k. We also give a good approximation of layout-width for general trees. Moreover we mention the close relations between layout-width and (modified) cutwidth for general graphs.

1.2.2 Minimizing Width of Area-Optimal Layout

We can derive from the relation between layout-width and cutwidth that for an N-vertex general graph with layout-width k, there exists a layout of the graph into a grid of area $O(kN)$ and width $k+2$. Although the layout has almost minimum width, the area is generally non-optimal when k is not a constant. In fact the layout is not area-optimal even for binary trees since every binary tree can be laid out into $O(N)$ area [17], [25] and there exists a binary tree with layout-width $\Theta(\log N)$. However we show that a tree with layout-width k can be laid out into optimal area by allowing to increase width k of the underlying grid by a constant factor, i.e.,

Theorem 1: An N-vertex tree with layout-width k can be laid out into a grid of area $O(N)$ and width $O(k)$.

Theorem 1 implies that an N-vertex tree with layout-width k can be laid out into aspect ratio $\Omega(\frac{N}{k^2})$, which is the largest possible for an area-optimal layout of the tree.

For binary tree layouts, we give a detailed trade-off between the area and width as follows:

Theorem 2: An N-vertex binary tree with layout-width k can be laid out into a grid of area $O(\frac{k+\alpha}{1+\alpha}N)$ and width $k+\alpha$, where α is an arbitrary integer with $0 \le \alpha \le \sqrt{N}$.

In fact Theorem 2 gives a tight upper bound for area, i.e.,

Theorem 3: For integers $k \ge 1$ and $\alpha \ge 0$, there exists a binary tree T with layout-width k such that for any layout of T into a grid of width $k+\alpha$, the grid has area $\Omega(\frac{k+\alpha}{1+\alpha}N)$, where N is the number of vertices of T.

Theorem 3 implies that $\alpha = \Omega(k)$ is essential for a layout of a graph with layout-width k into optimal area.

Our proofs of Theorems 1 and 2 are constructive, and we can obtain a polynomial time algorithm for constructing a desired layout.

1.2.3 Complexity

The decision problem for our problem can be formalized as follows:

Area-Width-Efficient Layout
Instance A graph G and integers n and k.
Question Does there exist a layout of G into a grid of area n and width k?

In this paper we show the following theorem:

Theorem 4: Area-Width-Efficient Layout is NP-complete even if G is restricted to a binary tree.

It should be noted that since the area of a grid is the product of its length and width, Area-Width-Efficient Layout is equivalent to the following:

Length-Width-Efficient Layout
Instance A graph G and integers l and k.
Question Does there exist of a layout G into a grid of length l and width k?

1.3 Organization

The paper is organized as follows: Some definitions are given in Sect. 2. In Sect. 3, we characterize layout-width for binary trees and approximate layout-width for general trees. We also mention the close relations between layout-width and (modified) cutwidth. We prove Theorems 1, 2 and 3 in Sect. 4, and Theorem 4 in Sect. 5. We conclude the paper with some remarks in Sect. 6.

2. Preliminaries

For a graph G, $V(G)$ and $E(G)$ are the vertex set and edge set of G, respectively. $G[U]$ is the subgraph of G induced by $U \subseteq V(G)$. We also denote by $G[S]$ the subgraph of G induced by $S \subseteq E(G)$. We denote $G[V(G)-U]$ simply by $G-U$. Moreover $G-\{v\}$ for $v \in V(G)$ is denoted simply by $G-v$. Furthermore $G-V(H)$ for another graph H is denoted simply by

$G - H$. We denote $|V(G)|$ simply by $|G|$.

We denote the set of integers $\{i \mid 0 \leq i < m\}$ by $[m]$. For a d dimensional vector $\boldsymbol{v}$, let $\pi_i(\boldsymbol{v})$ ($i \in [d]$) be the ith component of $\boldsymbol{v}$. For integers $l \geq 1$ and $k \geq 1$, the *(two dimensional) grid* of *length* l and *width* k denoted by $M(l,k)$ is the graph with vertex set $[l] \times [k]$ and edge set $\{(\boldsymbol{u},\boldsymbol{v}) \mid \exists i \in [2]\ \pi_i(\boldsymbol{u}) = \pi_i(\boldsymbol{v}) \pm 1,\ \pi_j(\boldsymbol{u}) = \pi_j(\boldsymbol{v})\ (j \neq i)\}$. The vertex sets $\{i\} \times [k]$ and $[l] \times \{j\}$ of $M(l,k)$ are denoted by $(i,*)$ and $(*,j)$, respectively. $M(l,k)[(i,*)]$ and $M(l,k)[(*,j)]$ are called the ith *column* and jth *row*, respectively. An edge $(\boldsymbol{u},\boldsymbol{v})$ of a grid is called a *column edge* if $\pi_0(\boldsymbol{u}) = \pi_0(\boldsymbol{v})$, a *row edge* otherwise. The *area* and *aspect ratio* of $M(l,k)$ is lk and $\max\{\frac{l}{k}, \frac{k}{l}\}$, respectively. Unless otherwise stated, we assume that a grid has the length at least its width.

A *layout* $\langle \phi, \rho \rangle$ of a graph G into a grid H is defined by a one-to-one mapping $\phi : V(G) \to V(H)$, together with a mapping ρ that maps each edge $(u,v) \in E(G)$ onto a set of edges of H which induces a path connecting $\phi(u)$ and $\phi(v)$. For a subgraph G' of G, we define that $\langle \phi, \rho \rangle(G')$ is the subgraph induced by $\bigcup_{e \in E(G')} \rho(e)$ and $\{\phi(v) \mid v \in V(G')\}$. A vertex $\boldsymbol{v}$ of H is said to be *free* if $\phi(u) \neq \boldsymbol{v}$ for any $u \in V(G)$. Similarly an edge of H is said to be *free* if the edge is not contained in $\rho(e)$ for any $e \in E(G)$.

The layout is said to be *under edge-disjoint (routing) model*, or simply *edge-disjoint* if $\rho(e) \cap \rho(e') = \emptyset$ for each pair of $e, e' \in E(G)$. The edge-disjoint layout is said to be *under Manhattan (routing) model*, or simply called *Manhattan layout* if no vertex of $V(G) - \{u,v\}$ is mapped in $H[\rho((u,v))]$ for $(u,v) \in E(G)$, and for each pair of $e, e' \in E(G)$ such that $H[\rho(e)]$ and $H[\rho(e')]$ have a vertex $\boldsymbol{u}$ in common as an internal vertex, one of $\rho(e)$ and $\rho(e')$ contains the two row edges incident to $\boldsymbol{u}$ and the other contains the two column edges incident to $\boldsymbol{u}$. Unless otherwise stated, we assume throughout the paper that layouts are under Manhattan routing model. Moreover, since no edge-disjoint layout exists for a graph with maximum vertex degree 5 or more, we assume throughout the paper that graphs have maximum vertex degree at most 4.

3. Layout-Width

Unless otherwise stated, we assume throughout Sects. 3 and 4 that graphs considered are connected and have at least one vertex. It should be noted that the proofs for connected graphs in the sections can easily be extended to disconnected graphs.

The layout-width is defined as follows: For a graph G and an integer $k \geq 1$, a Manhattan layout of G into a grid of width k is called a *k-(Manhattan-)layout* of G. The *(Manhattan-)layout-width* of a graph G, denoted by $lw(G)$, is the minimum value of k such that there exists a k-layout of G.

3.1 Characterization

3.1.1 Spine

In order to characterize layout-width, we introduce a graph parameter, which is almost same as *proper-pathwidth* for trees. The proper-pathwidth was introduced in [22][†] as a variant of pathwidth.

For a graph G, let $\tau(G)$ be the positive integer defined as follows:

Definition 1:

1. $\tau(G) = 1$ if and only if G is a path.
2. For $k > 1$, $\tau(G) \leq k$ if and only if there exists a path P of G such that each connected component G' of $G - P$ has $\tau(G') < k$.

The condition of 2 in Definition 1 is identical with the necessary and sufficient condition given in [24] for a tree to have proper-pathwidth at most k for $k \geq 2$. In fact, for a tree T, $\tau(T)$ is equivalent to the proper-pathwidth of T, denoted by $ppw(T)$, except that if T consists of a single vertex, then $\tau(T) = 1$ and $ppw(T) = 0$. For a graph G with $\tau(G) \geq 2$, we call a path P of G a *k-spine* if each connected component G' of $G - P$ has $\tau(G') < k$. A k-spine is called simply a spine if G has no $(k-1)$-spine. Since the difference between $\tau(T)$ and $ppw(T)$ for a tree T is quite trivial, we have from [24] the following lemma:

Lemma A: For a tree T, we can find a spine of T and determine the proper-pathwidth of T, and hence $\tau(T)$ in polynomial time. □

Moreover we give a basic property of τ for trees.

Lemma 5: $\tau(T') \leq \tau(T)$ for a tree T and a subtree T' of T.

Proof It is known that the set of graphs with proper-pathwidth at most k is minor-closed [22]. Thus it follows that $ppw(T') \leq ppw(T)$. If T' has at least two vertices, then we have that $\tau(T') = ppw(T') \leq ppw(T) = \tau(T)$. Otherwise, we have that $\tau(T') = 1 \leq \tau(T)$. □

3.1.2 Lower Bound

For a subgraph H of a grid, let $\pi_0^{\min}(H) = \min_{\boldsymbol{v} \in V(H)} \{\pi_0(\boldsymbol{v})\}$ and $\pi_0^{\max}(H) = \max_{\boldsymbol{v} \in V(H)} \{\pi_0(\boldsymbol{v})\}$. For a graph G, if there exists a layout ε of the union of G and m 2-vertex paths $P_0, \ldots, P_{m-1}$ such that for every $i \in [m]$, $\varepsilon(P_i)$ contains a vertex of the $\pi_0^{\min}(\varepsilon(G))$th column and one of the $\pi_0^{\max}(\varepsilon(G))$th column, then we say that G can be laid out with *m through tracks*, i.e., $\varepsilon(P_0), \ldots, \varepsilon(P_{m-1})$. The *$k$-layout-thickness* of G with $lw(G) \leq k$, denoted by $lt_k(G)$ is the minimum value of

[†]The proper-pathwidth of [22] is different from a parameter referred to as the same term in [15].

h such that G has a k-layout with $k-h$ through tracks. We have the following lemma by definition:

Lemma 6: $lt_k(G) \leq lw(G) \leq k$ for an integer $k \geq 1$ and a graph G with $lw(G) \leq k$. □

Lemma 7: For an integer $k \geq 1$, $lt_k(G) = 1$ if and only if G is a path.

Proof Obviously a path has a k-layout with $k-1$ through tracks but has no k-layout with k through tracks. Thus $lt_k(G) = 1$ if G is a path. Conversely, if $lt_k(G) = 1$, then G has a k-layout ε with $k-1$ through tracks by definition. Thus $\varepsilon(G)$ has neither two row edges joining the same pair of columns nor two vertices in a column which are images of vertices of G. This means that G has neither cycles nor vertices with degree at least 3, i.e., G is a path. □

Lemma 8: $lt_k(G) \geq \tau(G)$ for a graph G and an integer $k \geq lw(G)$.

Proof We fix $k \geq 1$ and show the lemma for a graph G with $lw(G) \leq k$ by induction on $lt_k(G)$. If $lt_k(G) = 1$, then we have the lemma by Lemma 7 and Definition 1. Assume that $lt_k(G') \geq \tau(G')$ for a graph G' with $lt_k(G') < lt_k(G)$. Let $\varepsilon = \langle \phi, \rho \rangle$ be a k-layout of G. Then there exist (not necessarily distinct) two edges e and e' of G such that $\rho(e)$ and $\rho(e')$ induce paths containing a vertex of the $\pi_0^{\min}(\varepsilon(G))$th column and a vertex of the $\pi_0^{\max}(\varepsilon(G))$th column, respectively. There exists a path P containing e and e' since G is connected. We have by the definition of P that $G-P$ is laid out with at least one more through tracks than those of G. This means that $lt_k(G') < lt_k(G)$ for each connected component G' of $G-P$. Thus it follows by induction hypothesis that $\tau(G') \leq lt_k(G')$. Therefore we have by Definition 1 that $\tau(G) \leq lt_k(G)$. □

By Lemmas 6 and 8, we have the following lemma:

Lemma 9: $lw(G) \geq \tau(G)$ for a graph G. □

3.1.3 Upper Bound

Let G be a graph with $lw(G) \leq k$ $(k \geq 1)$ and $v \in V(G)$ with vertex degree at most 3. Let G' be the graph obtained from G by adding a vertex u and joining u and v with an edge. If there exists a layout of G such that v is mapped onto the 0th row, or there exists a layout of G' such that u is mapped onto the 0th row, then we say that G can be laid out with an *exit track* from v.

Lemma 10: For a graph G with $lw(G) \leq k$ $(k \geq 1)$ and $v \in V(G)$ with degree at most 3, there exists a k-layout of G with an exit track from v.

Proof Let $\langle \phi, \rho \rangle$ be a k-layout of G and $\phi(v) = (i, j)$. The lemma is immediate if $j = 0$. Moreover, from the regularity of a grid, the lemma holds also if $j = k-1$.

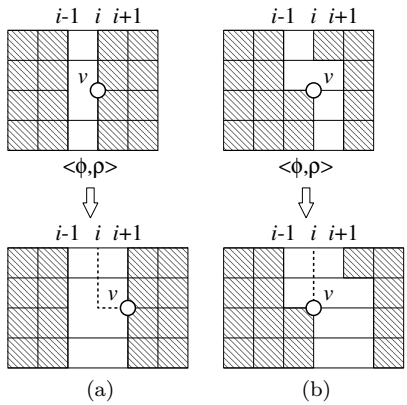

Fig. 1 Layout with an exit track from v (represented by dotted lines) which is obtained from a layout $\langle \phi, \rho \rangle$ by inserting an additional column. Figures (a) and (b) show the cases that the free edge e incident to $\phi(v)$ is $((i-1, j), (i, j))$ and that $e = ((i, j), (i, j-1))$, respectively.

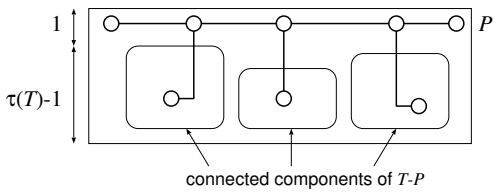

Fig. 2 $\tau(T)$-layout of a binary tree T.

Thus we assume that $0 < j < k-1$. By assumption, $\phi(v)$ is incident to a free edge e since v has degree at most 3. From the regularity of a grid, we may assume without loss of generality that e is the column edge $((i, j), (i, j-1))$ or a row edge. Thus we can obtain a desired layout from $\langle \phi, \rho \rangle$ by "inserting" an additional column as shown in Fig. 1. □

Lemma 11: $lw(T) \leq \tau(T)$ for a binary tree T.

Proof We prove the lemma by induction on $\tau(T)$. If $\tau(T) = 1$, then the lemma is immediate by Definition 1. Let T be a tree with $\tau(T) \geq 2$, and assume that $lw(T') \leq \tau(T')$ for a tree T' with $\tau(T') < \tau(T)$. By Definition 1 and induction hypothesis, there exists a spine P of T such that each connected component T' of $T-P$ has $lw(T') \leq \tau(T') < \tau(T)$. By Lemma 5, we may assume without loss of generality that P has end-vertices with degree at most 2. It follows from Lemma 10 that there exists a $(\tau(T)-1)$-layout of T' with an exit track from the vertex v adjacent to a vertex u of P. Since T is binary and P has end-vertices with degree at most 2, at most one connected component has a vertex adjacent to u. Thus we can obtain a $\tau(T)$-layout of T by laying out P into the 0th row, each connected component of $T-P$ into the 1st through $(k-1)$st rows, and edges joining the components and P into exit tracks (Fig. 2). Therefore we have that $lw(T) \leq \tau(T)$. □

Lemma 12: $lw(T) \leq 2\tau(T) - 1$ for a tree T.

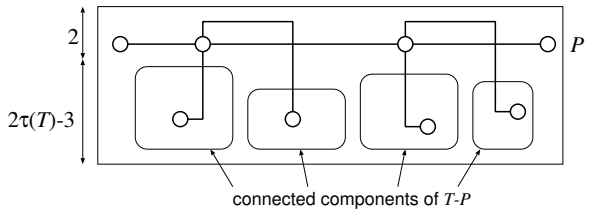

Fig. 3 $(2\tau(T)-1)$-layout of a tree T.

Proof We prove the lemma by induction on $\tau(T)$. If $\tau(T) = 1$, then the lemma is immediate by Definition 1. Let T be a tree with $\tau(T) \geq 2$, and assume that $lw(T') \leq 2\tau(T') - 1$ for a tree T' with $\tau(T') < \tau(T)$. By Definition 1 and induction hypothesis, there exists a spine P of T such that each connected component T' of $T - P$ has $lw(T') \leq 2\tau(T') - 1 \leq 2(\tau(T) - 1) - 1 = 2\tau(T) - 3$. By a similar argument as the proof of Lemma 11, we can obtain a $(2\tau(T) - 1)$-layout of T by laying out P into the 1st row, each connected component of $T - P$ into the 2nd through $(2\tau(T) - 2)$nd rows, and edges joining the components and P into exit tracks as shown in Fig. 3. Thus we have that $lw(T) \leq 2\tau(T) - 1$. □

By Lemmas 9, 11 and 12, we have the following theorem:

Theorem 13: $\tau(T) \leq lw(T) \leq 2\tau(T) - 1$ for a tree T. In particular, $lw(T) = \tau(T)$ if T is binary. □

3.2 Relations to Cutwidth and Modified Cutwidth

Cutwidth (see for a survey [5]) and modified cutwidth ([9], [16], [18]) are well-known and extensively examined graph parameters. A *linear layout* of an N-vertex graph G is a mapping $\lambda : V(G) \to [N]$. The *cutwidth* of λ is $\max_{i\in[N-1]} |\{(u, v) \in E(G) \mid \lambda(u) \leq i < \lambda(v)\}|$. The *modified cutwidth* of λ is $\max_{1\leq i<N-1} |\{(u, v) \in E(G) \mid \lambda(u) < i < \lambda(v)\}|$. The cutwidth of G denoted by $cw(G)$ is the minimum cutwidth overall linear layouts of G. The modified cutwidth of G denoted by $mcw(G)$ is the minimum modified cutwidth overall linear layouts of G. Not surprisingly, layout-width and (modified) cutwidth are quite close as follows:

The following lemma is shown in [19].

Lemma B: $cw(G) - 1 \leq lw(G)$ for a graph G. □

By a similar argument as the proof of Lemma B in [19] we can also show the following lemma:

Lemma 14: $mcw(G) + 1 \leq lw(G)$ for a graph G.

Proof Let $\langle\phi, \rho\rangle$ be a $lw(G)$-layout of G and M be the grid onto which G is laid out. Let $\lambda : (i, j) \in V(M) \mapsto i \cdot lw(G) + j$. It is easy to see that λ is a linear layout of M with modified cutwidth at most $lw(G) - 1$. Since $\lambda(\phi(u))$ $(u \in V(G))$ defines an order of $V(G)$, we can obtain a linear layout λ' of G which maps $V(G)$ to $[|G|]$ in the order. Since $\langle\phi, \rho\rangle$ is edge-disjoint, λ' has modified cutwidth at most that of λ. This means that and $mcw(G) \leq lw(G) - 1$. □

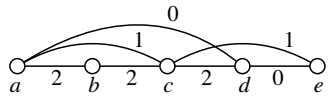

(a) Linear layout of G with cutwidth 3. The edges are labeled with integers from 0 to 2.

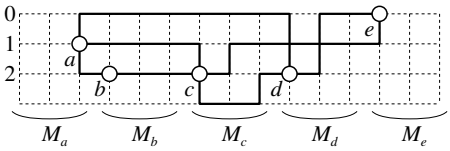

(b) A 4-layout of G.

Fig. 4 $(cw(G) + 1)$-layout of a graph G.

Lemma 15: $lw(G) \leq cw(G) + 1$ for a graph G.

Proof Let λ be a linear layout of G. We can construct a layout of G into a grid M with length $3|G|$ and width $cw(G) + 1$ as follows:

1. For $u \in V(G)$, let M_u be the subgraph of M induced by the vertex set $\bigcup_{i\in[3]}(3\lambda(u) + i, *)$.
2. Assign each $e \in E(G)$ an integer $r(e) \in [cw(G)]$ so that $r((u, v)) \neq r((s, t))$ for any distinct edges $(u, v), (s, t) \in E(G)$ with $\lambda(u) \leq \lambda(s) < \min\{\lambda(v), \lambda(t)\}$. It should be noted that such a function r can be obtained by a greedy assignment.
3. Map every $u \in V(G)$ in a vertex of M_u so that we can route each $(u, v) \in E(G)$ by using M_u, M_v, and the $r((u, v))$th row between M_u and M_v as shown in Fig. 4.

□

Lemma 16: $lw(T) \leq mcw(T)+1$ for a binary tree T.

Proof By definition it follows that $\tau(T) = ppw(T)$ for a tree T with at least two vertices. It is shown in [23] that $ppw(G) = ms(G)$ for a graph G, where $ms(G)$ is the mixed search number of G (we omit its definition here). Moreover it is shown in [18] that $ms(G) \leq mcw(G)+1$. By combining these results and Lemma 11, we have that $lw(T) \leq mcw(T) + 1$ for a binary tree T with at least two vertices. Since the lemma is immediate for a tree consisting of a single vertex, we have the lemma. □

By Lemmas B, 14, 15, and 16, we have the following theorems:

Theorem 17: $cw(G) - 1 \leq lw(G) \leq cw(G) + 1$ for a graph G. □

Theorem 18: $lw(T) = mcw(T) + 1$ for a binary tree T. □

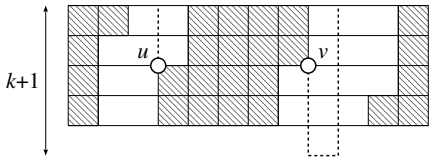

Fig. 5 Layout with exit tracks from u and v.

4. Minimizing Width of Area-Optimal Layout

By Theorem 17 and the proof of Lemma 15, we have the following theorem:

Theorem 19: An N-vertex graph G with $lw(G) = k$ can be laid out into a grid with area $O(kN)$ and width $k + 2$.

Although the layout of Theorem 19 has almost minimum width, the area is generally non-optimal when k is not a constant.

In what follows, we show that trees can be laid out into grids with optimal area and quite small width, and that the results are tight.

4.1 Layout of Trees

We prove Theorems 1 and 2 by a series of lemmas.

Lemma 20: For a graph G with $lw(G) \leq k$ $(k \geq 1)$ and $v \in V(G)$ with degree at most 3, if G can be laid out into $M(l, k)$, then there exists a layout of G into $M(l + 1, k)$ with an exit track from v.

Proof Immediate from the proof of Lemma 10. □

Lemma 21: For a graph G with $lw(G) \leq k$ and $u, v \in V(G)$ with degree at most 2, if G can be laid out into $M(l, k)$, then there exists a layout of G into $M(l+2, k)$ with exit tracks from u and v.

Proof There exists a layout $\langle \phi, \rho \rangle$ of G into $M(l+1, k)$ with an exit track from u by Lemma 20. If $\phi(v)$ is in the 0th row, then the lemma is immediate. Otherwise, $\phi(v)$, say (i, j), is incident to a free edge which is a row edge or $((i, j), (i, j-1))$. Thus we can obtain a desired layout by modifying $\langle \phi, \rho \rangle$ as shown in Fig. 1. □

Lemma 22: For a graph G with $lw(G) \leq k$ and $u, v \in V(G)$ with degree at most 3, if G can be laid out into $M(l, k)$, then there exists a layout of G into $M(l+3, k+1)$ with exit tracks from u and v.

Proof There exists a layout $\langle \phi, \rho \rangle$ of G into $M(l+1, k)$ with an exit track from u by Lemma 20. If $\phi(v)$, say (i, j), is in the 0th row or incident to a free edge which is a row edge or $((i, j), (i, j-1))$, then the lemma holds as shown in the proof of Lemma 21. Otherwise, the free edge incident to $\phi(v)$ is $((i, j), (i, j+1))$. In this case we can obtain a desired layout as shown in Fig. 5. □

Lemma 23: For an integer $\alpha \geq 0$ and an N-vertex tree T with $\tau(T) = 1$, T can be laid out into $M(\lceil \frac{N}{1+\alpha} \rceil, 1 + \alpha)$.

Proof This is immediate since T is a path and a grid has a Hamilton path. □

Lemma 24: An N-vertex tree T can be laid out into $M(2N, 2\tau(T) - 1)$. In particular, T can be laid out into $M(2N, \tau(T))$ if T is binary.

Proof We prove the lemma by induction on $\tau(T)$. The lemma is immediate if $\tau(T) = 1$. Assume that $\tau(T) \geq 2$ and that any tree T' with $\tau(T') < \tau(T)$ can be laid out into $M(2|T'|, 2\tau(T') - 1)$. By definition 1, T has a spine P such that each connected component T' of $T - P$ has $\tau(T') < \tau(T)$. By Lemma 5, we may assume without loss of generality that P has end-vertices with degree at most 3. By induction hypothesis, T' can be laid out into $M(2|T'|, 2\tau(T) - 3)$. Thus, by Lemma 20, there exists a layout of T' into $M(2|T'| + 1, 2\tau(T) - 3)$ with an exit track from the vertex adjacent to a vertex u of P.

Since at most two connected components of $T - P$ have a vertex adjacent to u, we can layout T as Fig. 3 into a grid of width $2\tau(T) - 1$ and length $\sum_{u \in V(P)} \max\{1, \sum_{T' \in \mathcal{C}_u} (2|T'| + 1)\} \leq 2|P| + 2\sum_{u \in V(P)} \sum_{T' \in \mathcal{C}_u} |T'| \leq 2N$, where $\mathcal{C}_u$ is the set of connected components of $T - P$ containing a vertex adjacent to u.

If T is binary, then a single additional row suffices to layout P and edges joining P and $T - P$ as Fig. 2. Thus we can prove by the similar argument based on induction on $\tau(T)$ that T can be laid out into $M(2N, \tau(T))$. □

The following lemma is a corollary of the result shown by Leiserson [17] and Variant [25] independently that an N-vertex tree can be laid out into a square grid of area $O(N)$:

Lemma C: There exists a real number $0 < C < 1$ and an integer $\alpha_0 > 3$ such that for any integer $\alpha \geq \alpha_0$, any tree with at most $C\alpha^2$ vertices can be laid out into $M(\alpha - 3, \alpha - 3)$. □

In what follows, C and α_0 denote the values of Lemma C. For a path P of a tree T and $v \in V(P)$, $T^P(v)$ is the maximal subtree of T which contains v but does not contain an edge of P.

Lemma 25: Let $\alpha \geq \alpha_0$ be an integer and T be a tree with $N > C\alpha^2$ vertices. If T has a path P such that each connected component of $T - P$ has at most $C\alpha^2$ vertices, then T can be laid out into $M(\frac{10N}{C\alpha}, \alpha)$.

Proof Since for any path P' containing P as a subgraph, each connected component of $T - P'$ has at most $C\alpha^2$ vertices, we may assume without loss of generality that P has end-vertices with degree at most 3.

Suppose that P has the vertex set $\{u_0, \ldots, u_{p-1}\}$

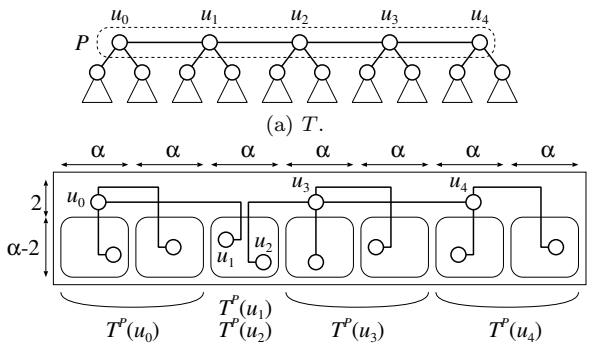

(a) T.

(b) Layout of T into $M(7\alpha, \alpha)$.

Fig. 6 Layout of a tree T which has a path P such that each connected component of $T - P$ has at most $C\alpha^2$ vertices. Figure (b) shows the case that $r_0 = 0$, $r_1 = 1$, $r_2 = 3$, $r_3 = 4$, and $r_4 = 5$ ($q = 4$).

and edge set $\{(u_i, u_{i+1}) \mid i \in [p-1]\}$. Let $\{r_0, \ldots, r_q\}$ and $\{s_0, \ldots, s_{q-1}\}$ be sets of integers such that:

- $0 = r_0 < r_1 < \cdots < r_q = p$;
- $s_j = \sum_{r_j \le i < r_{j+1}} |T^P(u_i)|$ for $j \in [q]$;
- For $j \in [q]$, $s_j \le C\alpha^2 + 1$ if $r_{j+1} = r_j + 1$, $s_j \le C\alpha^2$ otherwise, and;
- For $j \in [q]$, $s_{j+1} > \frac{C\alpha^2}{2}$ if $s_j \le \frac{C\alpha^2}{2}$.

It should be noted that such integers can be found by a greedy scan of integers from 0 to p.

Since at least $\lfloor \frac{q}{2} \rfloor$ integers of $s_0, \ldots s_{q-1}$ have values at least $\frac{C\alpha^2}{2}$, it follows that $\lfloor \frac{q}{2} \rfloor \frac{C\alpha^2}{2} \le \sum_{j \in [q]} s_j = N$. Thus we have that $q \le \frac{4N}{C\alpha^2} + 1 < \frac{5N}{C\alpha^2}$. Therefore it suffices to show that T can be laid out into $M(2q\alpha, \alpha)$.

For $j \in [q]$, if $r_{j+1} = r_j + 1$, then we can layout each connected component of $T^P(u_{r_j}) - u_{r_j}$ into $M(\alpha - 3, \alpha - 3)$ by Lemma C. Thus there exists a layout of $T^P(u_{r_j})$ into $M(\alpha - 2, \alpha - 3)$ with an exit track from the vertex adjacent to u_{r_j} by Lemma 20. Otherwise, we can layout the subtree induced by $T^P(u_{r_j}), \ldots, T^P(u_{r_{j+1}-1})$ into $M(\alpha - 3, \alpha - 3)$ by Lemma C. Thus there exists a layout of the induced subtree into $M(\alpha, \alpha - 2)$ with exit tracks from u_{r_j} and $u_{r_{j+1}-1}$ by Lemma 22. Thus we can obtain a layout of T into $M(2q\alpha, \alpha)$ as shown in Fig. 6. □

For integers $k \ge 1$ and $\alpha \ge \alpha_0$, a path P of a graph G is called a (k, α)-*spine* of G if each connected component G' of $G - P$ has $\tau(G') < k$ or has at most $C\alpha^2$ vertices.

Lemma 26: For a tree T with $\tau(T) \ge 2$ and integers $k \ge \tau(T)$ and $\alpha \ge \alpha_0$, there exists a (k, α)-spine P satisfying the following condition:

Condition 1: For $v \in V(P)$ such that $T^P(v) - v$ has a connected component with more than $C\alpha^2$ vertices, $T - v$ has at least two connected components with more than $C\alpha^2$ vertices.

Proof Assume that P is a k-spine which does not satisfy Condition 1. By assumption P has a (unique) vertex v_0 such that $T^P(v_0) - v_0$ has a unique connected component T_1 with more than $C\alpha^2$ vertices and that every connected component of $T - v_0$ except T_1 has at most $C\alpha^2$ vertices. Moreover T_1 has $\tau(T_1) < k$ since P is a k-spine of T. Thus the path consisting of the single vertex v_0 is a (k, α)-spine of T. Therefore it follows from Lemma 5 that any path containing v_0 is also a (k, α)-spine of T.

Let v_1 be the vertex of T_1 which is adjacent to v_0. The path P_1 induced by $\{v_0, v_1\}$ is a desired (k, α)-spine if P_1 satisfies Condition 1. Otherwise, $T^{P_1}(v_1) - v_1$ has a unique connected component T_2 with more than $C\alpha^2$ vertices. Let v_2 be the vertex of T_2 which is adjacent to v_1. The path P_2 induced by $\{v_0, v_1, v_2\}$ is a desired (k, α)-spine if P_2 satisfies Condition 1. Otherwise, we continue the process. Since T is finite, there exists i such that P_i is a (k, α)-spine satisfying Condition 1. □

Lemma 27: For an N-vertex tree T and an integer $\alpha \ge \alpha_0$, T can be laid out into $M(l(N), 2\tau(T) + \alpha)$, where $l(n)$ is $\frac{26n}{C\alpha} - 16\alpha$ if $n > C\alpha^2$, $\alpha - 2$ otherwise. In particular, T can be laid out into $M(l(N), \tau(T) + \alpha)$ if T is binary.

Proof We prove the lemma by induction on $\tau(T)$. We first assume that $\tau(T) = 1$. It follows from Lemma 23 that T can be laid out into $M(\lceil \frac{N}{1+\alpha} \rceil, 1 + \alpha)$. By the definition of C and the assumption that $\alpha \ge \alpha_0$, it follows that $C\alpha^2 \le (\alpha - 3)^2$. Thus, if $N \le C\alpha^2$, then we have that $\lceil \frac{N}{1+\alpha} \rceil \le \lceil \frac{(\alpha-3)^2}{1+\alpha} \rceil \le \alpha - 3 < l(N)$. If $N > C\alpha^2$, then we have that $l(N) - \lceil \frac{N}{1+\alpha} \rceil \ge \frac{26N}{C\alpha} - 16\alpha - (\frac{N}{\alpha} + 1) > \frac{26N - 16C\alpha^2 - N - C\alpha^2}{C\alpha} > \frac{8N}{C\alpha} > 0$. Therefore the lemma holds if $\tau(T) = 1$.

We next assume that $\tau(T) \ge 2$ and that any tree T' with $\tau(T') < \tau(T)$ can be laid out into $M(l(|T'|), 2\tau(T) + \alpha - 2)$. By Lemma 26, T has a $(\tau(T), \alpha)$-spine P satisfying Condition 1. If each connected component of $T - P$ has at most $C\alpha^2$ vertices, then the lemma holds by Lemmas C and 25. Thus we assume that $T - P$ has a connected component with more than $C\alpha^2$ vertices. In addition, since any path containing P as a subgraph is a $(\tau(T), \alpha)$-spine satisfying Condition 1, we may assume without loss of generality that P has end-vertices with degree at most 3. Suppose that P has vertex set $\{u_0, \ldots, u_{p-1}\}$ and edge set $\{(u_i, u_{i+1}) \mid i \in [p-1]\}$. Let $I = \{i \in [p] \mid \exists T' \in \mathcal{C}_i \text{ with } |T'| > C\alpha^2\}$, where $\mathcal{C}_i$ is the set of connected components of $T^P(u_i) - u_i$. Suppose that $\{r_0, \ldots, r_q\} = I \cup \{1 \le i < p \mid i - 1 \in I\} \cup \{0, p\}$ with $0 = r_0 < r_1 < \cdots < r_q = p$. Let $J = \{j \in [q] \mid r_j \in I\}$ and $\overline{J} = [q] - J$.

For $j \in J$, since P is a $(\tau(T), \alpha)$-spine, $T' \in \mathcal{C}_{r_j}$ has $\tau(T') < \tau(T)$ or $|T'| \le C\alpha^2$, and hence,

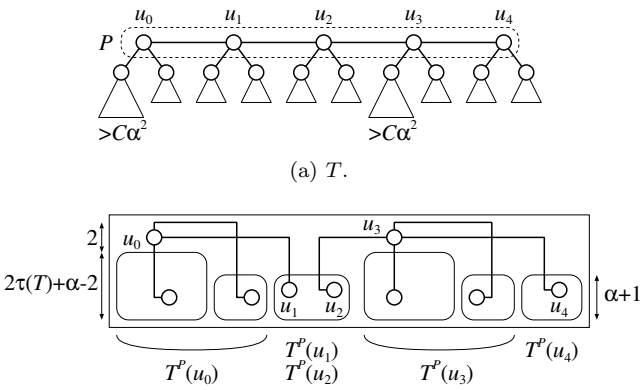

(a) T.

(b) Layout of T.

Fig. 7 Layout of a tree T which has a $(\tau(T), \alpha)$-spine P such that $I = \{0, 3\}$, $r_0 = 0$, $r_1 = 1$, $r_2 = 3$, $r_3 = 4$, $r_4 = 5$ $(q = 4)$.

we can layout T' into $M(l(|T'|), 2\tau(T) + \alpha - 2)$ by induction hypothesis and Lemma C. Thus there exists a layout of T' into $M(l(|T'|) + 1, 2\tau(T) + \alpha - 2)$ with an exit track from the vertex adjacent to u_{r_j} by Lemma 20. For $j \in \overline{J}$, we can layout the subtree $\overline{T}_j$ induced by $T^P(u_{r_j}), \ldots, T^P(u_{r_{j+1}-1})$ into $M(l(|\overline{T}_j|), \alpha)$ by Lemmas C and 25. Thus there exists a layout of $\overline{T}_j$ into $M(l(|\overline{T}_j|) + 3, \alpha + 1)$ with exit tracks from u_{r_j} and $u_{r_{j+1}-1}$ by Lemma 22 if $u_{r_j} \neq u_{r_{j+1}-1}$, by Lemma 20 otherwise. Therefore we can layout T into a grid $M(\bar{l}, 2\tau(T) + \alpha)$ as shown in Fig. 7, where $\bar{l} = \sum_{\substack{j \in J \\ T' \in \mathcal{C}_{r_j}}} (l(|T'|) + 1) + \sum_{j \in \overline{J}} (l(|\overline{T}_j|) + 3)$.

It remains to show that $\bar{l} \leq l(N)$. By the definition of $\{r_0, \ldots, r_q\}$ and the fact that P satisfies Condition 1, we have that $|\{T' \in \mathcal{C}_{r_j} \mid j \in J, |T'| > C\alpha^2\}| + |\{\overline{T}_j \mid j \in \overline{J}, |\overline{T_j}| > C\alpha^2\}| \geq \max\{\lfloor \frac{q}{2} \rfloor, 2\}$. Thus $\bar{l}$ is at most $\sum_{\substack{j \in J \\ T' \in \mathcal{C}_{r_j} \\ |T'| > C\alpha^2}} (\frac{26|T'|}{C\alpha} - 16\alpha) + \sum_{\substack{j \in J \\ T' \in \mathcal{C}_{r_j} \\ |T'| \leq C\alpha^2}} (\alpha - 2) + 2|J| + \sum_{\substack{j \in \overline{J} \\ |\overline{T}_j| > C\alpha^2}} (\frac{26|\overline{T}_j|}{C\alpha} - 16\alpha) + \sum_{\substack{j \in \overline{J} \\ |\overline{T}_j| \leq C\alpha^2}} (\alpha - 2) + 3|\overline{J}| \leq \frac{26N}{C\alpha} - 16\alpha \cdot \max\{\lfloor \frac{q}{2} \rfloor, 2\} + (\alpha - 2)(2|J| + |\overline{J}|) + 2|J| + 3|\overline{J}| \leq \frac{26N}{C\alpha} - 16\alpha \cdot \max\{\lfloor \frac{q}{2} \rfloor, 2\} + (\alpha - 2) \cdot 2q + 3q$. If $q \geq 4$, then $\bar{l}$ is at most $\frac{26N}{C\alpha} - 16\alpha \cdot \frac{q-1}{2} + (2\alpha - 1)q = \frac{26N}{C\alpha} + 8\alpha - (6\alpha + 1)q \leq \frac{26N}{C\alpha} - 16\alpha - 4 \leq l(N)$. If $q \leq 3$, then $\bar{l}$ is at most $\frac{26N}{C\alpha} - 16\alpha \cdot 2 + (2\alpha - 1)q \leq \frac{26N}{C\alpha} - 26\alpha - 3 \leq l(N)$. Therefore T can be laid out into $M(l(N), 2\tau(T) + \alpha)$.

If T is binary, then a single additional row suffices to layout u_{r_j} and edges incident to u_{r_j} for $j \in J$. Thus we can prove by the similar argument based on induction on $\tau(T)$ that T can be laid out into $M(l(N), \tau(T) + \alpha)$. □

Lemma 28: For an N-vertex tree T with layout-width k and an integer α with $0 \leq \alpha \leq \sqrt{N}$, T can be laid out into $M(O(\frac{N}{1+\alpha}), 2k + \alpha)$. In particular, T can be laid out into $M(O(\frac{N}{1+\alpha}), k + \alpha)$ if T is binary.

Proof It follows from Theorem 13 that $\tau(T) \leq k$. Thus, if $\alpha < \alpha_0$, then the lemma holds by Lemmas 23 and 24. Otherwise, since $N \geq \alpha^2 > C\alpha^2$, the lemma holds by Lemma 27. □

Theorem 1 can be obtained from Lemma 28 by setting $\alpha = \Theta(k)$. Theorem 2 is an immediate corollary of Lemma 28. Thus we complete the proofs of Theorems 1 and 2. It should be noted that the layouts given in the proofs are constructed in polynomial time.

4.2 Lower Bound

We prove Theorem 3 restated below:

Theorem 3: For integers $k \geq 1$ and $\alpha \geq 0$, there exists a binary tree T with $lw(T) \leq k$ such that for any layout of T into a grid of width $k + \alpha$, the grid has area $\Omega(\frac{k+\alpha}{1+\alpha} N)$, where N is the number of vertices of T.

Proof Let $D > 1$ be an arbitrary number, and let d and p be integers with $d \geq \frac{2D^{\frac{1}{k}}}{D^{\frac{1}{k}} - 1}$ and $p \geq \frac{d}{1+\alpha}$. We define that T_1 is a $(1 + \alpha)p$-vertex path and that T_k $(k \geq 2)$ is the binary tree obtained from d copies $S_0, \ldots, S_{d-1}$ of T_{k-1} and a d-vertex path with vertices $u_0, \ldots, u_{d-1}$ by joining a vertex of S_i with degree at most 2 and u_i with an edge for $i \in [d]$.

We can observe by definition that $lw(T_k) \leq k$ and that T_k has $N \equiv d^{k-1}(1 + \alpha)p + \frac{d^k - d}{d-1} \leq \frac{d^k - 1}{d-1}(1 + \alpha)p$ vertices. For any layout of T_k into a grid M of length l and width $k + \alpha$, at least $d - 2$ copies of T_{k-1} are laid out with at least one through track. By repeating this argument recursively, we have that at least $(d - 2)^{k-1}$ copies of T_1 are laid out with at least $k - 1$ through tracks. Since the vertices of such $(d - 2)^{k-1}$ copies of T_1 cannot be mapped onto the through tracks, it follows that $l(1 + \alpha) \geq (d - 2)^{k-1}(1 + \alpha)p$, and hence, $\frac{N}{l(1+\alpha)} \leq \frac{\frac{d^k-1}{d-1}(1+\alpha)p}{(d-2)^{k-1}(1+\alpha)p} \leq (\frac{d}{d-2})^k \leq D$. Thus we have that M has area $l(k + \alpha) \geq \frac{k+\alpha}{D(1+\alpha)} N$. □

5. NP-Completeness

In this section, we prove Theorem 4, i.e.,

Theorem 29: The problem of determining, given a binary tree T and integers l and k, whether there exists a layout of T into $M(l, k)$ is NP-complete.

We construct a pseudo-polynomial reduction from 3-Partition, which is well known to be NP-complete in the strong sense and defined as follows:

3-Partition
Instance A set of $3r$ integers $A = \{a_0, a_1, \ldots, a_{3r-1}\}$ and a positive integer b such that $b/4 < a_i < b/2$ and $\sum_{i \in [3r]} a_i = rb$.
Question Can A be partitioned into r disjoint sets $A_0, \ldots, A_{r-1}$ such that $\sum_{a \in A_j} a = b$ for $j \in [r]$?

5.1 Translation of Instance

For integers $a_0, \ldots, a_{3r-1}$, and b given as an instance of 3-Partition, we construct T, l, and k as the instance of Length-Width-Efficient Layout as follows:

1. Let $l = (4k+1)\gamma + r(\beta b + 5) + 7$ and $k = 3r + 2$, where $\beta = 8r + 9$, $\gamma = k(2k + \delta) + 1$, and $\delta = 3r^2(\beta b + 5) + 2r + 2$.
2. Let S be a path with vertex set $\{s_0, \ldots, s_{k-1}, s'_0, \ldots, s'_{k-1}\}$ and edge set $\{(s_i, s'_i) \mid i \in [k]\} \cup \{(s_{2i}, s_{2i+1}) \mid 2i, 2i+1 \in [k]\} \cup \{(s'_{2i-1}, s'_{2i}) \mid 2i-1, 2i \in [k]\}$.
3. For $i \in [k]$, let P_i, P'_i, and R_i be a γ-vertex path with end-vertices p_i and $\hat{p}_i$, a $2k\gamma$-vertex path with end-vertices p'_i and $\hat{p}'_i$, and a $2k\gamma$-vertex path with end-vertices r_i and $\hat{r}_i$, respectively.
4. Let W be a tree with vertex set $\{w_i \mid i \in [r(\beta b + 1)+1]\} \cup \{z'_j \mid j \in [r+1]\}$ and edge set $\{(w_i, w_{i+1}) \mid i \in [r(\beta b + 1)]\} \cup \{(z_j, z'_j) \mid j \in [r+1]\}$, where $z_j = w_{j(\beta b+1)}$ for $j \in [r+1]$.
5. For $i \in [3r]$, let Q_i be a $(\beta a_i + 1)$-vertex path with an end-vertex q_i.
6. For $i \in [k-1]$, let Y_i and Y'_i be 3-vertex paths with degree-2 vertices c_i and c'_i, respectively.
7. Let T be the tree obtained by adding the following edges:
   a. (s_i, p_i) for $i \in [k]$.
   b. $(\hat{p}_0, z_0)$ and $(\hat{p}_i, q_{i-2})$ for $2 \le i < k$.
   c. (s'_i, p'_i) for $i \in [k]$.
   d. $(\hat{p}'_0, c'_0)$ and $(\hat{p}'_i, c'_{i-1})$ for $1 \le i < k$.
   e. (z_r, r_0), (z'_r, r_1), and (q_{i-2}, r_i) for $2 \le i < k$.
   f. $(\hat{r}_i, c_{i-1})$ for $1 \le i < k$.

T is shown in Fig. 8. It should be noted that $\delta = lk - |T|$.

5.2 Correspondence of Answers

If $A = \{a_0, \ldots, a_{3r-1}\}$ can be partitioned into $A_0, \ldots, A_{r-1}$ such that $\sum_{a \in A_j} a = b$ for $j \in [r]$, then T can be laid out into $M(l, k)$ as shown in Fig. 8.

We show the converse throughout the rest of the subsection. Assume that there exists a layout $\varepsilon = \langle \phi, \rho \rangle$ of T into $M = M(l, k)$.

In what follows we use the following notations for simplicity: For $v \in V(T)$, let $\xi(v) = \pi_0(\phi(v))$. For a subgraph H of T, let $\xi^{\max}(H) = \max\{\pi_0(\boldsymbol{v}) \mid \boldsymbol{v} \in V(\varepsilon(H))\}$, $\xi^{\min}(H) = \min\{\pi_0(\boldsymbol{v}) \mid \boldsymbol{v} \in V(\varepsilon(H))\}$, and $d(H) =$ (the diameter of H) $+ 1$. For subgraphs H and H' of T, we write $H \sqsubseteq H'$ if $\xi^{\min}(H') \le \xi^{\min}(H)$ and $\xi^{\max}(H) \le \xi^{\max}(H')$. We denote $T[V(H) \cup V(H')]$ by $H \cup H'$. Moreover, for $U \subseteq V(T)$ and $v \in V(T)$, we denote $T[V(H) \cup U]$ and $T[V(H) \cup \{v\}]$ by $H \cup U$ and $H \cup v$, respectively.

For $i \in [k]$, H_i and H'_i denote the connected components of $T - S$ which contain P_i and P'_i, respectively. Let $\mathcal{P} = \{P_0, \ldots, P_{k-1}, P'_0, \ldots, P'_{k-1}\}$ and $\mathcal{H} = \{H_0, \ldots, H_{k-1}, H'_0, \ldots, H'_{k-1}\}$.

Lemma 30: For subgraphs H and H' of T, $|H| \le k(d(H') + \delta)$ if $H \sqsubseteq H'$.

Proof If $H \sqsubseteq H'$, then it follows that $|H| \le k(\xi^{\max}(H') - \xi^{\min}(H') + 1)$. Since $\varepsilon(H')$ has at most $\delta = lk - |T|$ free vertices, we have that $\xi^{\max}(H') - \xi^{\min}(H') + 1 \le d(H') + \delta$. Thus it follows that $|H| \le k(d(H') + \delta)$. □

Lemma 31: $H \not\sqsubseteq S$ for $H \in \mathcal{H}$.

Proof Since $|H| \ge \gamma > k(2k + \delta) = k(d(S) + \delta)$, we have the lemma by Lemma 30. □

Let $\mathcal{H}^- = \{H \in \mathcal{H} \mid \xi^{\min}(H) < \xi^{\min}(S)\}$ and $\mathcal{H}^+ = \{H \in \mathcal{H} \mid \xi^{\max}(S) < \xi^{\max}(H)\}$. It follows from Lemma 31 that $\mathcal{H}^- \cup \mathcal{H}^+ = \mathcal{H}$. Since M has k rows and $|\mathcal{H}| = 2k$, we have that $\mathcal{H}^- \cap \mathcal{H}^+ = \emptyset$ and $|\mathcal{H}^-| = |\mathcal{H}^+| = k$. Let $H^- \in \mathcal{H}^-$ such that $\xi^{\min}(H^-) = \max\{\xi^{\min}(H) \mid H \in \mathcal{H}^-\}$, and let $H^+ \in \mathcal{H}^+$ such that $\xi^{\max}(H^+) = \min\{\xi^{\max}(H) \mid H \in \mathcal{H}^+\}$. By the definitions of H^- and H^+, we have the following lemma:

Lemma 32: All the $2k$ rows of the two subgrids induced by $\bigcup_{\xi^{\min}(H^-) \le x \le \xi^{\min}(S)}(x, *)$ and by $\bigcup_{\xi^{\max}(S) \le x \le \xi^{\max}(H^+)}(x, *)$ are contained in the distinct images of $H_0 \cup s_0, \ldots, H_{k-1} \cup s_{k-1}, H'_0 \cup s'_0, \ldots, H'_{k-1} \cup s'_{k-1}$ by ε. □

Lemma 33: Any vertex of $T - \bigcup_{P \in \mathcal{P}} P - S$ is mapped in $\bigcup_{x < \xi^{\min}(H^-)}(x, *)$ or $\bigcup_{x > \xi^{\max}(H^+)}(x, *)$.

Proof By the definition of T, one end-vertex of $P \in \mathcal{P}$ is adjacent to a vertex of S, and the other end-vertex of P is adjacent either to a degree-3 vertex of $T - P$ or to no vertex of $T - P$. Thus, by Lemma 32, such degree-3 vertices cannot be mapped in $\bigcup_{\xi^{\min}(H^-) \le x \le \xi^{\max}(H^+)}(x, *)$, and hence, neither can a vertex of $T - \bigcup_{P \in \mathcal{P}} P - S$. □

From the regularity of M, we may assume without loss of generality that $\xi^{\max}(H^+) < \xi(z_0)$.

Lemma 34: $H^+ = P_1$ and $H^- = P'_1$.

Proof By Lemma 33, H^- and H^+ have no degree-3 vertex, i.e., $\{H^-, H^+\} = \{P_1, P'_1\}$. Thus it suffices to show that $H^+ \ne P'_1$. By the assumption that $\xi^{\max}(H^+) < \xi(z_0)$, we have that $H^+ \sqsubseteq S \cup P_0 \cup z_0$. Thus it follows from Lemma 30 that $|H^+| \le k(d(S \cup P_0 \cup z_0) + \delta) = k(2k + \gamma + 1 + \delta) < 2k\gamma$. Since P'_1 has $2k\gamma$ vertices, we have that $H^+ \ne P'_1$. □

Lemma 35: Any vertex of $H_i - P_i$ for $i \in [k]$ is mapped in $\bigcup_{x > \xi^{\max}(H^+)}(x, *)$.

Proof By Lemmas 31 and 33, it suffices to show that $\xi(q_i) \ge \xi^{\min}(H^-)$ for $i \in [3r]$. If $\xi(q_i) < \xi^{\min}(H^-)$, then we have that $H^- \sqsubseteq S \cup P_{i+2} \cup q_i$. Thus it follows from Lemma 30 that $|H^-| \le k(2k + \gamma + 1 + \delta) < 2k\gamma$.

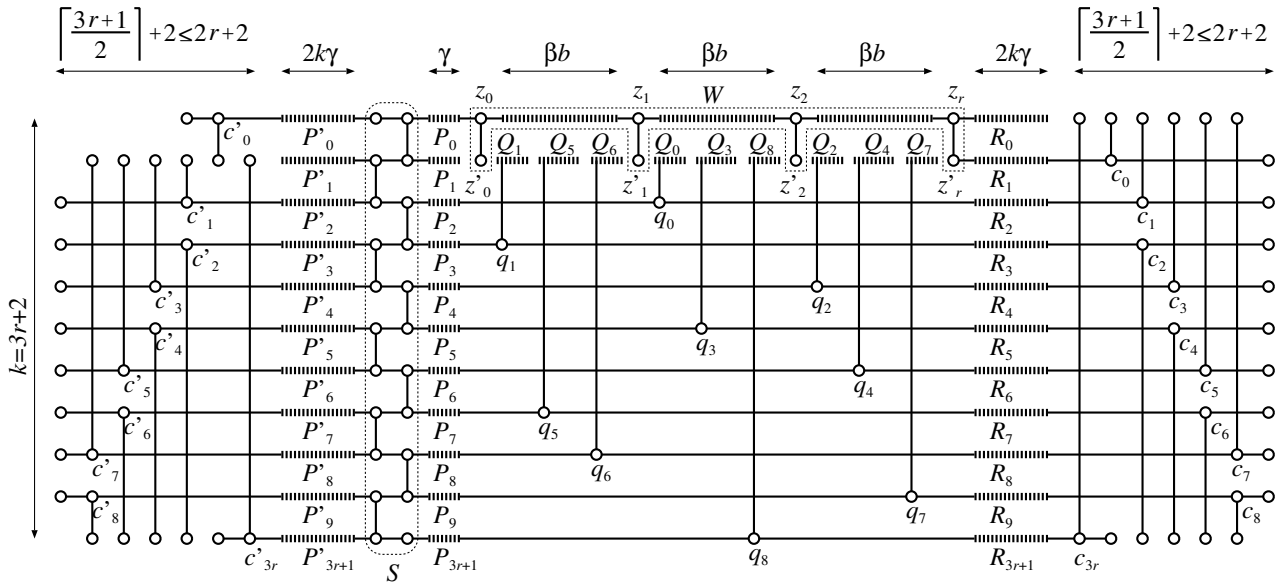

Fig. 8 The binary tree T. Dotted (thick) lines represent paths and solid lines represent edges. The figure shows a layout of T into $M(l,k)$ for the case that $A = \{a_0, \ldots, a_8\}$ can be partitioned into $A_0 = \{a_1, a_5, a_6\}$, $A_1 = \{a_0, a_3, a_8\}$, and $A_2 = \{a_2, a_4, a_7\}$ such that $\sum_{a \in A_j} a = b$ for $j \in \{0, 1, 2\}$.

However, this is a contradiction since $|H^-| = |P'_1| = 2k\gamma$ by Lemma 34. □

Lemma 36: $\xi^{\max}(H^+) \ge (2k+1)\gamma + 1$.

Proof By Lemmas 33 and 35, we have that $\mathcal{H}^- = \{H'_0, \ldots, H'_{k-1}\}$ and $\mathcal{H}^+ = \{H_0, \ldots, H_{k-1}\}$. Thus all the rows of the subgrid induced by $\bigcup_{\xi^{\min}(H^-) \le x \le \xi^{\max}(H^+)}(x, *)$ are contained in distinct images of $P_0 \cup P'_0 \cup \{s_0, s'_0\}, \ldots, P_{k-1} \cup P'_{k-1} \cup \{s_{k-1}, s'_{k-1}\}$ by ε. Thus we have by Lemma 34 that $\xi^{\max}(H^+) \ge |P_1 \cup P'_1 \cup \{s_1, s'_1\}| - 1 = (2k+1)\gamma + 1$. □

Lemma 37: $\xi^{\max}(W) < \xi^{\max}(R_i)$ for $i \in [k]$.

Proof Since $k(d(S \cup P_0 \cup W) + \delta) = k(2k + \gamma + r(\beta b + 1) + 2 + \delta) < 2k\gamma = |R_i|$ for $i \in [k]$, it follows from Lemma 30 that $R_i \not\subseteq S \cup P_0 \cup W$. Since $\xi^{\max}(S) < \xi^{\max}(H^+) < \xi^{\min}(R_i)$ by Lemma 35, we have the lemma. □

Let $\mathcal{R} = \{R_0, R_1 \cup Y_0, \ldots, R_{k-1} \cup Y_{k-2}\}$ and $R^+ \in \mathcal{R}$ such that $\xi^{\max}(R^+) = \min\{\xi^{\max}(R) \mid R \in \mathcal{R}\}$. Lemma 37 and the fact that $\xi^{\max}(S) < \xi^{\max}(H^+) < \xi(z_0)$ show the following lemma:

Lemma 38: All the k rows of the subgrid induced by $\bigcup_{\xi(z_r) \le x \le \xi^{\max}(R^+)}(x, *)$ are contained in the distinct images of $R_0 \cup z_r$, $R_1 \cup Y_0 \cup \{z_r, z'_r\}$, $H_2 \cup s_2, \ldots, H_{k-1} \cup s_{k-1}$ by ε. □

Lemma 39: $\xi(q_i) < \xi(z_r)$ for $i \in [3r]$, $\xi(z_j) < \xi(z_r)$ for $j \in [r]$, and $\xi(c_{i'}) > \xi^{\max}(R^+)$ for $i' \in [k-1]$.

Proof By Lemma 38, any degree-3 vertex except z_r is mapped either in $\bigcup_{x < \xi(z_r)}(x, *)$ or in $\bigcup_{x > \xi^{\max}(R^+)}(x, *)$. Since q_i ($i \in [3r]$) and z_j ($j \in [r]$) are intermediate degree-3 vertices of paths connecting $R \in \mathcal{R}$ and S, but $c_{i'}$ ($i' \in [k-1]$) is not on such a path, we have the lemma. □

Lemma 40: $\xi(z_r) - \xi^{\max}(H^+) \le r(\beta b + 5) + 5$.

Proof By Lemmas 38 and 39, $R^+ = R_0$ is mapped onto a single row. Thus we have that $\xi^{\max}(R_0) - \xi^{\min}(R_0) + 1 \ge |R_0| = 2k\gamma$. Therefore it follows from Lemmas 35 and 36 that $\xi(z_r) - \xi^{\max}(H^+) \le l - 1 - 2k\gamma - ((2k+1)\gamma + 1) = r(\beta b + 5) + 5$. □

By Lemmas 35, 37, 38, and 39, we have the following lemma:

Lemma 41:

$$\xi^{\min}(\overline{H}_i) < \xi^{\max}(H^+) < \xi(z_r) \le \xi^{\max}(\overline{H}_i) \quad \text{for } i \in [k] - \{1\}, \quad (1)$$

where $\overline{H}_0 = P_0 \cup W \cup s_0$ and $\overline{H}_i = P_i \cup R_i \cup \{s_i, q_{i-2}\}$ for $2 \le i < k$.

$$\xi^{\max}(H^+) < \xi^{\min}(Q_i) < \xi^{\max}(Q_i) < \xi(z_r) \quad \text{for } i \in [3r]. \quad (2)$$

$$\xi^{\max}(H^+) < \xi^{\min}(W - \{z_r, z'_r\}) < \xi^{\max}(W - \{z_r, z'_r\}) < \xi(z_r). \quad (3)$$

□

Lemma 42: $\xi^{\max}(H^+) < \xi(z_0) < \cdots < \xi(z_r)$.

Proof It follows from (1) and (3) of Lemma 41 that W is laid out with k-layout-thickness at most 2. Since any k-layout of W such that there exist j and j' with $0 \le j < j' < r$ and $\xi(z_j) \ge \xi(z_{j'})$ has thickness at least 3, we have the lemma. □

Let $X_0 = \{i \in [3r] \mid \xi^{\max}(Q_i) < \xi(z_1)\}$, and $X_j = \{i \in [3r] \mid \xi(z_j) < \xi^{\min}(Q_i),\ \xi^{\max}(Q_i) < \xi(z_{j+1})\}$ for $1 \le j < r$.

Lemma 43: $X_0, \ldots, X_{r-1}$ are disjoint and $\bigcup_{j\in[r]} X_j = [3r]$.

Proof Since z_j ($j \in [r]$) has degree 3, it follows from (1) of Lemma 41 that no path Q of $Q_0, \ldots, Q_{3r-1}$ can be mapped so that $\xi^{\min}(Q) \le \xi(z_j) \le \xi^{\max}(Q)$. Thus we have by (2) of Lemma 41 that $\bigcup_{j\in[r]} X_j = [3r]$. Moreover $X_0, \ldots, X_{r-1}$ are disjoint by Lemma 42. □

Lemma 44: $\sum_{i\in X_j} a_i = b$ for $j \in [r]$.

Proof By Lemma 43, it suffices to show that $\sum_{i\in X_j} a_i \le b$ for $j \in [r]$. To show this by contradiction, we assume that there exists $j \in [r]$ such that $\sum_{i\in X_j} a_i \ge b+1$. Let $\overline{M}$ be the subgrid induced by $\bigcup_{\xi^{\max}(H^+)<x<\xi(z_r)}(x,*)$, It follows from (1) and (2) of Lemma 41 that $Q_i - q_i$ is mapped onto a single row of $\overline{M}$ for $i \in X_j$. Thus it follows that $\xi(z_{j+1}) - \xi(z_j) \ge \sum_{i\in X_j} |Q_i - q_i| + 1 \ge \beta(b+1)+1$ if $j \ge 1$, $\xi(z_1) - \xi^{\max}(H^+) \ge \sum_{i\in X_0} |Q_i - q_i| + 1 \ge \beta(b+1)+1$ otherwise. Thus, since z_j and z_{j+1} are connected by a βb-vertex path, there exists a set U of at least β vertices in $\overline{M}$ which consists of free vertices of $\varepsilon(W)$ or of $\varepsilon(P_0 \cup z_0)$. By Lemma 41, $\bigcup_{i\in[3r]}(Q_i - q_i)$ and $W - \{z_r, z'_r\}$ are laid out into $\overline{M}$ with k-layout-thickness at most 2. Thus we have that $\xi(z_r) - \xi^{\max}(H^+) =$ (the number of columns of $\overline{M}$) $+ 1 \ge \frac{\sum_{i\in[3r]}|Q_i-q_i|+|W-\{z_r,z'_r\}|+|U|}{2}+1 \ge \frac{r\beta b+r(\beta b+2)+\beta}{2}+1 > r(\beta b+5)+5$, contradicting Lemma 40. □

By Lemma 44 and $|T| = O(r^6 b)$, we have obtained a desired pseudo-polynomial reduction. Since Length-Width-Efficient Layout is in NP, the proof of Theorem 29 is completed.

6. Concluding Remarks

Knock-knee model is the routing model obtained from Manhattan model by relaxing its routing condition so that not only crossing two paths but also bending them at the same grid point is allowed. Since Manhattan model is a restricted version of knock-knee model, our upper bounds are also valid under knock-knee model. Besides our proofs of lower bounds, including NP-hardness, are not based on whether knock-knees are allowed or not. Therefore all the theorems given here also hold under knock-knee model.

References

[1] S. N. Bhatt and S. S. Cosmadakis, "The complexity of minimizing wire lengths in VLSI layouts," Information Processing Letters, vol. 25, pp. 263–267, 1987.
[2] S. N. Bhatt and F. T. Leighton, "A framework for solving VLSI graph layout problems," J. Comput. System Sciences, vol. 28, pp. 300–343, 1984.
[3] T. M. Chan, M. T. Goodrich, S. R. Kosaraju, and R. Tamassia, "Optimizing area and aspect ratio in straight-line orthogonal tree drawings," Graph Drawing (GD 96), vol. 1190 of *Lecture Notes in Computer Science*, pp. 63–75, Springer-Verlag, Berlin, 1997.
[4] P. Czerwinski and V. Ramachandran, "Optimal VLSI graph embeddings in variable aspect ratio rectangles," Algorithmica, vol. 3, pp. 487–510, 1988.
[5] J. Díaz, J. Petit, and M. Serna, "A survey of graph layout problems," ACM Computing Surveys, vol. 34, no. 3, pp. 313–356, 2002.
[6] Y. Dinitz, S. Even, R. Kupershtok, and M. Zapolotsky, "Some compact layouts of the butterfly," Proc. 11th Annual ACM Symposium on Parallel Algorithms and Architectures, pp. 54–63, 1999.
[7] D. Dolev, T. Leighton, and H. Trickey, "Planar embedding of planar graphs," Advances in Computing Research (F. P. Preparata, ed.), vol. 2, pp. 147–161, JAI Press, Greenwich, Conn., 1984.
[8] G. Even, S. Guha, and B. Schieber, "Improved approximations of crossings in graph drawings and VLSI layout areas," Proc. 32nd ACM Symposium on Theory of Computing, pp. 296–305, 2000.
[9] M. R. Fellows and M. A. Langston, "On well-partial-order theory and its application to combinatorial problems of VLSI design," SIAM J. Disc. Math., vol. 5, pp. 117–126, 1992.
[10] M. Formann and F. Wagner, "The VLSI layout problem in various embedding models," Graph-Theoretic Concepts in Computer Science (R. H. Möhring, ed.), vol. 484 of *Lecture Notes in Computer Science*, pp. 130–139, Springer-Verlag, Berlin, 1991.
[11] A. Garg, M. T. Goodrich, and R. Tamassia, "Area-efficient upward tree drawing," Proc. 9th Annual ACM Symposium on Computational Geometry, pp. 359–368, 1993.
[12] A. Garg, M. T. Goodrich, and R. Tamassia, "Planar upward tree drawings with optimal area," International Journal of Computational Geometry and Applications, vol. 6, no. 3, pp. 333–356, 1996.
[13] D. Gordon, "Efficient embeddings of binary trees in VLSI arrays," IEEE Trans. Computers, vol. C-36, no. 9, pp. 1009–1018, September 1987.
[14] A. Gregori, "Unit-length embedding of binary trees on a square grid," Information Processing Letters, vol. 31, pp. 167–173, 1989.
[15] H. Kaplan and R. Shamir, "Pathwidth, bandwidth and completion problems to proper interval graphs with small cliques," SIAM J. Comput., vol. 25, no. 3, pp. 540–561, 1996.
[16] F. T. Leighton, "New lower bound techniques for VLSI," Proc. 22nd Annual IEEE Symposium on Foundations of Computer Science, pp. 1–12, 1981.
[17] C. E. Leiserson, "Area efficient VLSI computation," MIT Press, Cambridge, MA, 1983.
[18] F. S. Makedon, C. H. Papadimitriou, and I. H. Sudborough, "Topological bandwidth," SIAM J. Alg. Disc. Meth., vol. 6, no. 3, pp. 418–444, July 1985.
[19] A. Raspaud, O. Sýkora, and I. Vrt'o, "Cutwidth of the de

Bruijn graph," Theoretical Informatics and Applications, vol. 29, no. 6, pp. 509–514, 1995.

[20] A. L. Rosenberg and L. S. Heath, "Graph separators with applications," Kluwer Academic/Plenum Publishers, New York, 2001.

[21] J. A. Storer, "On minimal-node-cost planar embeddings," Networks, vol. 14, pp. 181–212, 1984.

[22] A. Takahashi, S. Ueno, and Y. Kajitani, "Minimal acyclic forbidden minors for the family of graphs with bounded path-width," Discrete Math., vol. 127, pp. 293–304, 1994.

[23] A. Takahashi, S. Ueno, and Y. Kajitani, "Mixed searching and proper-path-width," Theoretical Computer Science, vol. 137, pp. 253–268, 1995.

[24] S. Tayu and S. Ueno, "Efficient embeddings of binary trees with bounded proper pathwidth into paths and grids," IEICE Trans. Fundamentals, vol. E80-A, no. 1, pp. 183–192, January 1997.

[25] L. G. Valiant, "Universality considerations in VLSI circuits," IEEE Trans. Computers, vol. C-30, no. 2, pp. 135–140, 1981.

Akira Matsubayashi received the B.E. degree in electrical and electronic engineering in 1991, M.E. degree in intelligence science in 1993, and D.E. degree in electrical and electronic engineering in 1996 all from Tokyo Institute of Technology, Tokyo, Japan. From 1996 to 2000, he was a research associate in the Department of Information Science at Utsunomiya University, Utsunomiya, Japan. Currently, he is an assistant professor in the Department of Information and Systems Engineering at Kanazawa University, Kanazawa, Japan. His research interests are in parallel and VLSI computation. He is a member of the ACM, SIAM, and the Information Processing Society of Japan.