Disturbance Attenuation and H∞ Control on Repulsive Type Magnetic Bearing

メタデータ	言語: English 出版者: 公開日: 2017-10-03 キーワード (Ja): キーワード (En): 作成者: Mukhopadhyay, S.C., Ohji, T., Iwahara, Masayoshi, Yamada, Sotoshi, Matsumura, Fumio メールアドレス: 所属:
URL	http://hdl.handle.net/2297/48340

Disturbance Attenuation and H^∞ Control of Repulsive Type Magnetic Bearing

S.C.Mukhopadhyay, T.Ohji, M.Iwahara, S.Yamada and F.Matsumura
Laboratory of Magnetic Field Control and Applications, Faculty of Engineering, Kanazawa University,
Kodatsuno 2-40-20, Kanazawa 920, Japan.

Abstract - Repulsive Type Magnetic Bearing using permanent magnet for the levitation and radial control makes the system cheap and simplified control scheme. But the system is prone to disturbance in the absence of any active control. This paper reports on the application of H^∞ control for robust stabilization and configuration of permanent magnet resulting in improved stiffness characteristics for disturbance attenuation in the radial direction of repulsive type magnetic bearing system. A laboratory prototype model and the controller around digital signal processor have been developed and experiments are carried out.

I. INTRODUCTION

In repulsive type magnetic bearing the levitation is achieved using the repulsive forces acting between the stator and rotor permanent magnet making the system a single-axis control problem. H^∞ control system has been designed and developed for making the system robustly stable against the parameter changes and various model uncertainties. The better performance along the uncontrolled radial direction has been achieved by proper placement of the permanent magnets. As higher stiffness is desirable from the radial disturbance attenuation view point, placement of permanent magnet is of utmost important once. This paper describes the implementation of H^∞ controller and permanent magnet configuration achieving improved radial stiffness resulting in better disturbance attenuation characteristics. This system can be used in fly-wheel energy storage and other such applications in presence of small radial disturbance.

II. SYSTEM CONFIGURATION

The proposed repulsive type permanent magnet bearing system has two sets of permanent magnets in both the stator and rotor, placed at the two sides of the motor having magnetization axis same as that of longitudinal axis of the motor. The repulsive force between the permanent magnets has been effectively utilized for the stability in the radial direction. Stability in the axial direction has been implemented by controlled electromagnets resulting a non-contact type magnetic bearing system. The configuration of the bearing system is shown in Fig.1.

Manuscript received May 2, 1997.
S.C.Mukkhopadhyay, fax: +81-762-34 4946, tel: +81-762-344943, email : chandra@magstar.ec.t.kanazawa-u.ac.jp.

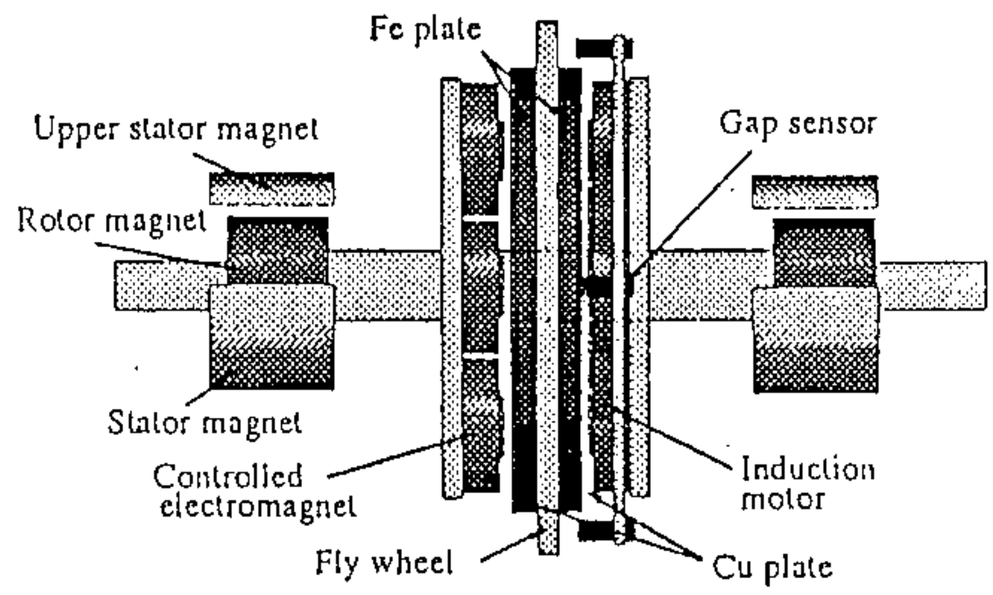

Fig.1 Configuration of Magnetic Bearing System.

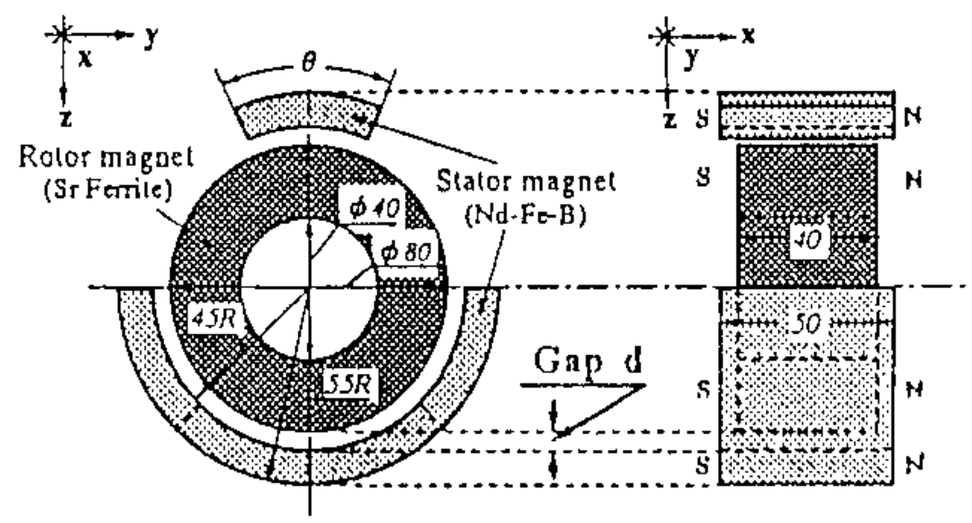

Fig.2 2D-View of PM with upper magnet section.

The suitable arrangement of permanent magnets for better stiffness has been analyzed by finite element method. A typical arrangement is shown in Fig.2. By changing the arc length of the upper stator permament magnet (i.e. changing the angle θ) the repulsive forces and stiffnesses are measured. Figs.3 and 4 shows the repulsive force and stiffness characteristics respectively. It is seen that higher stiffness has to be achieved at the expense of repulsive force. Since improved stiffness is important from the viewpoint of disturbance attenuation and higher repulsive force is important for levitating the rotor, a trade-off has to be adopted for the PM configuration. Fig.5 shows an optimum configuration corresponding to θ=45°. The stator permanent magnet is made of Nd-Fe-B magnet and the rotor is made of Strontium-ferrite magnet. The mass of the rotor is 8kg. Gap sensors are used to give the information of the gap between the electromagnet and the rotor.

III. MODELING OF THE SYSTEM

The detailed state-space modeling has been derived in [1]-[3]. Simplified H^∞ control has been designed for the magnetic bearing system. The four electromagnets for the axial control

0018-9464/97$10.00 © 1997 IEEE

are connected in series. The basic equations are given by (1) and (2) as follows.

$$m\frac{d^2x}{dt^2} = 2\left(S + \frac{\sum F_i}{W}\right)x + 2\frac{\sum F_i}{I}i \qquad (1)$$

$$L\frac{di}{dt} = e - Ri \qquad (2)$$

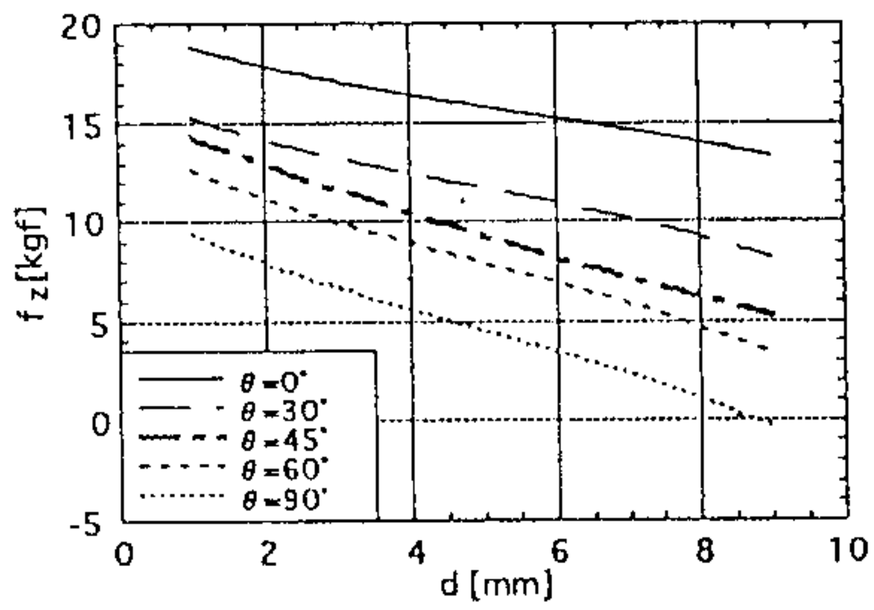

Fig.3 Repulsive force characteristics for different upper PM section.

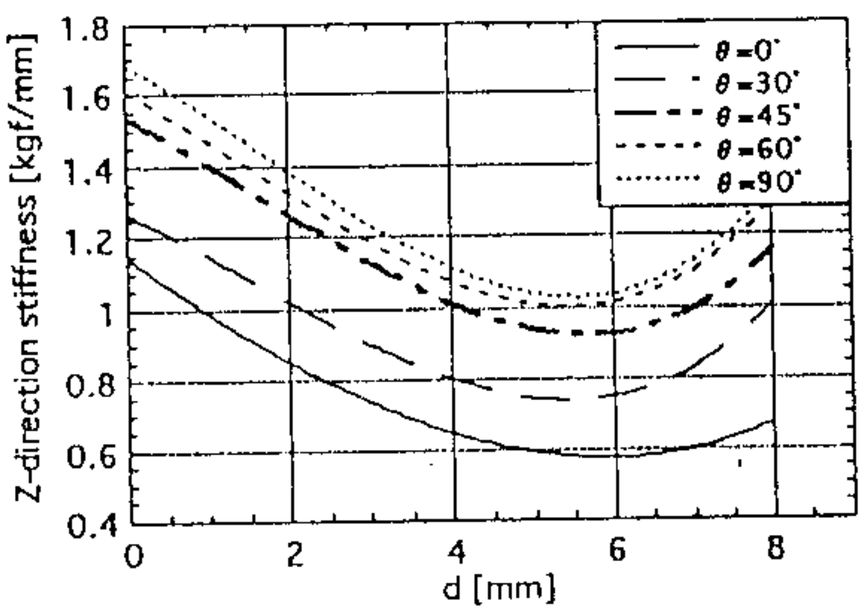

Fig.4 Stiffness characteristics for different upper PM section.

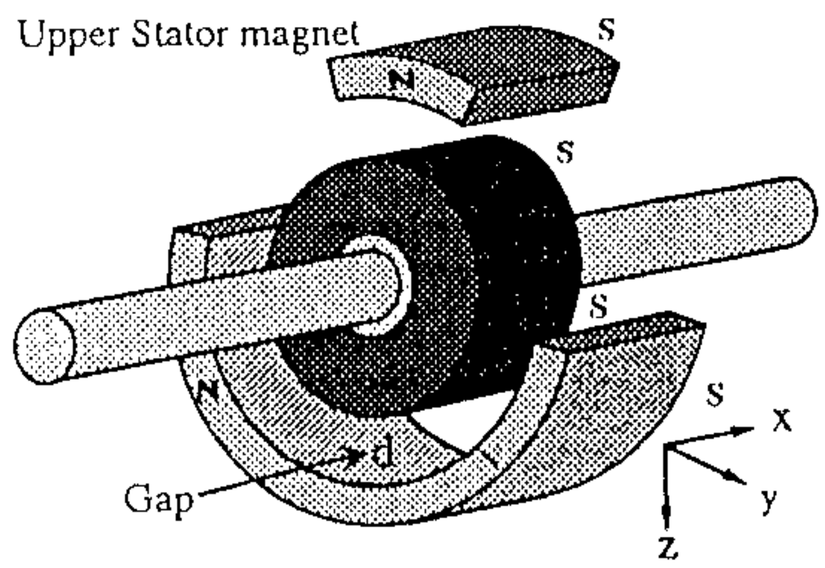

Fig.5 Permanent Magnet Configuration.

where m is the mass of rotor, S is a constant obtained from the repulsive force characteristics of permanent magnet, F_i is the attractive force of ith electromagnet on the rotor, W is the nominal gap between rotor and electromagnet, I is the nominal current of electromagnet, L and r are the inductance and resistance of the electromagnet, x is the gap displacement from the nominal value and i is the current deviation from the nominal value. The gap-displacement, x and its derivative and the current deviation, i, are taken as state variables. Using the values of the different parameters the simplified state space representation is given by (3), the details of parameters are given in [2].

$$\frac{d}{dt}\begin{bmatrix} x \\ \dot{x} \\ i \end{bmatrix} = \begin{bmatrix} 0 & 1 & 0 \\ 5885 & 0 & 2.654 \\ 0 & 0 & -60.5 \end{bmatrix}\begin{bmatrix} x \\ \dot{x} \\ i \end{bmatrix} + \begin{bmatrix} 0 \\ 0 \\ 5.165 \end{bmatrix} e$$

$$y = \begin{bmatrix} 1 & 0 & 0 \end{bmatrix}\begin{bmatrix} x \\ \dot{x} \\ i \end{bmatrix} \qquad (3)$$

IV. Implementation of H^∞ Controller

The system is controllable and observable. The transfer functions of this system is given by (4).

$$G(s) = \frac{13.7079}{(s-76.7138)(s+76.7138)(s+60.5)} \qquad (4)$$

The details of the H^∞ controller has been described in [4]. The H^∞ norm specification is given by (5).

$$\left\| \begin{matrix} \gamma W_1(s) & S(s) \\ W_2(s) & T(s) \end{matrix} \right\|_\infty < 1 \qquad (5)$$

where $W_1(s)$ and $W_2(s)$ are desired weighting functions, $\gamma > 0$ is an adjusting scalar parameter, S(s) is the sensitivity function and T(s) is the complementary sensitivity function. The selection criterion of weighting functions has been discussed in [5]. In this study the weighting functions $W_1(s)$ and $W_2(s)$ are chosen as in (6).

$$W_1(s) = \frac{1.329}{1 + (s/2\pi \cdot 0.016)}$$

$$W_2(s) = 1.5\times 10^{-6} \cdot \left[1 + \frac{s}{2\pi \cdot 0.00012}\right]\left[1 + \frac{s}{2\pi \cdot 4.78}\right] \cdot \left[1 + \frac{s}{2\pi \cdot 55.7}\right] \qquad (6)$$

and γ is 13.6. The bode plot of the sensitivity S with $\gamma^{-1}W_1^{-1}$ and the complementary sensitivity T with W_2^{-1} are shown in Figs. 6 and 7 respectively. As in Figs. 6 and 7, the sensitivity S approaches to $\gamma^{-1}W_1^{-1}$ at low frequencies and the complementary sensitivity T approaches W_2^{-1} at high frequencies. These are essentially based on the remarkable all-pass property in the H^∞ theory. Using the above weighting functions and using Robust control toolbox MATLAB, H^∞ controller has been designed. Using the above controller the system has been simulated by Matlab. Fig.8 shows the simulated response characteristics at the step input of the system.

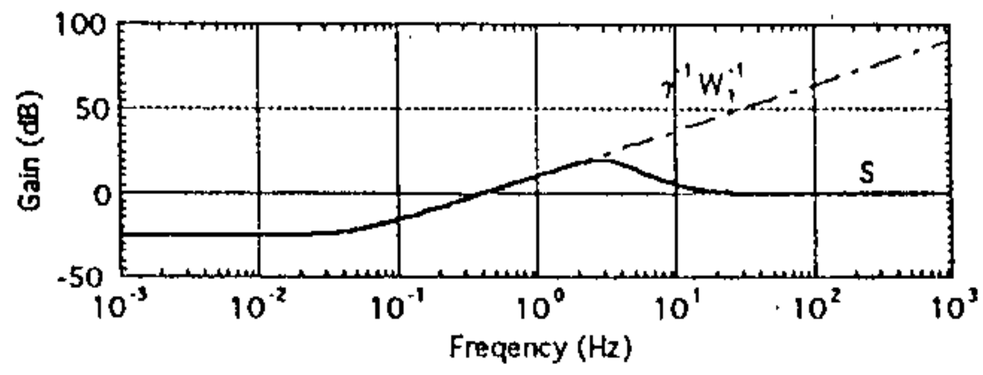

Fig.6 Sensitivity Function.

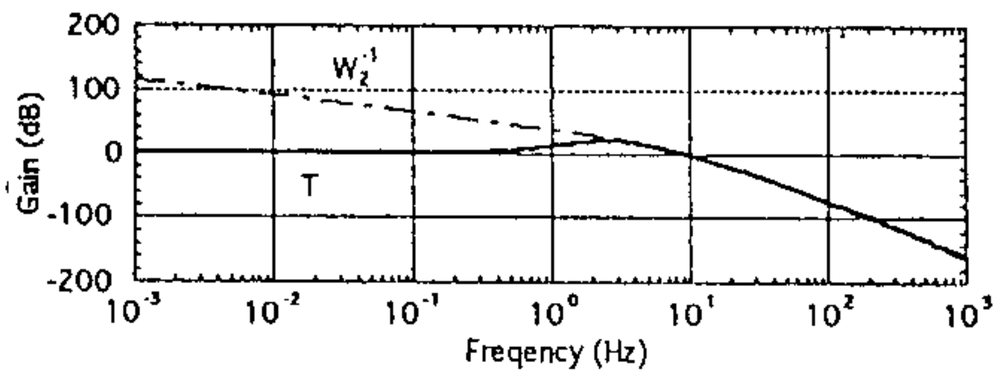

Fig.7 Complementary Sensitivity Function.

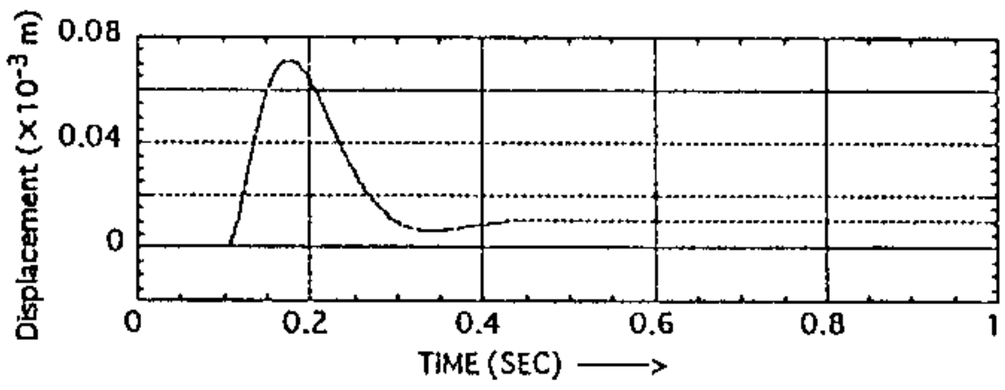

Fig.8 Simulated Response Characteristic.

V. Controller Implementation

The controller has been configured around a digital signal processor as shown in Fig.9. The position of the gap-sensor is used as input and goes to the controller through the A-D port of the DSP. The DSP outputs through D-A port to the power-amplifier for adjusting the current of the electromagnet.

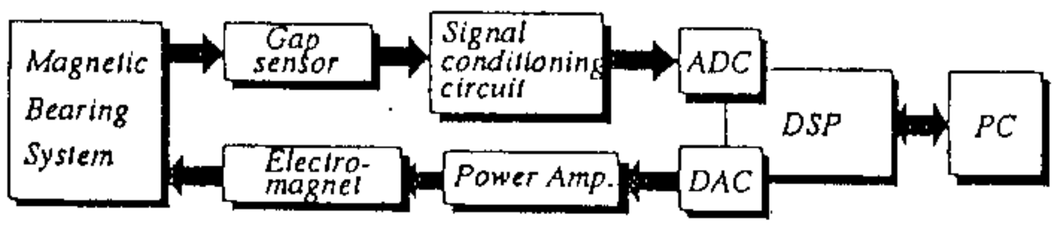

Fig.9 Controller Representation.

VI. Experimental Results

With the help of the controller the rotor has been stabilized. Fig.10 shows the rotor oscillation at steady state along the x axis. The responses of the rotor for disturbances along the vertical axis are shown in Figs.11(a) and 11(b) respectively. Fig.11(a) shows the disturbance characteristics for θ=0°, i.e. when upper stator magnet is not used. Fig.11(b) shows the same for θ=45° which is the optimum configuration. It clearly shows that the effect of disturbance has been attenuated to almost one third of original value.

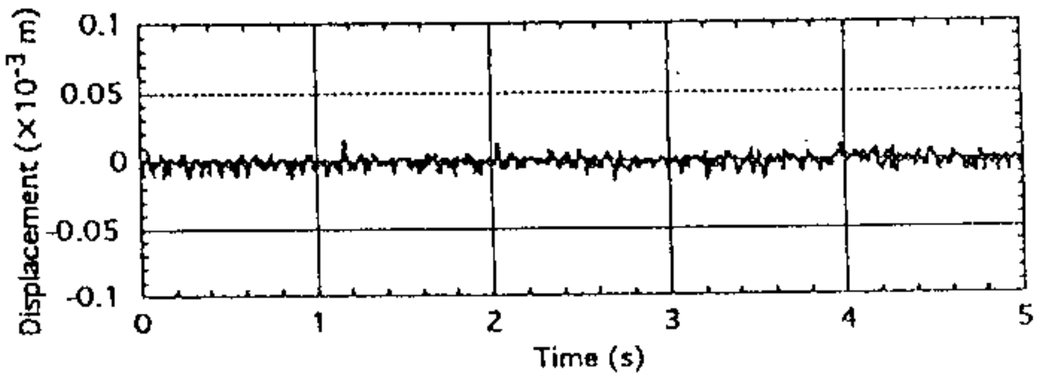

Fig.10 Vibration Characteristics of rotor.

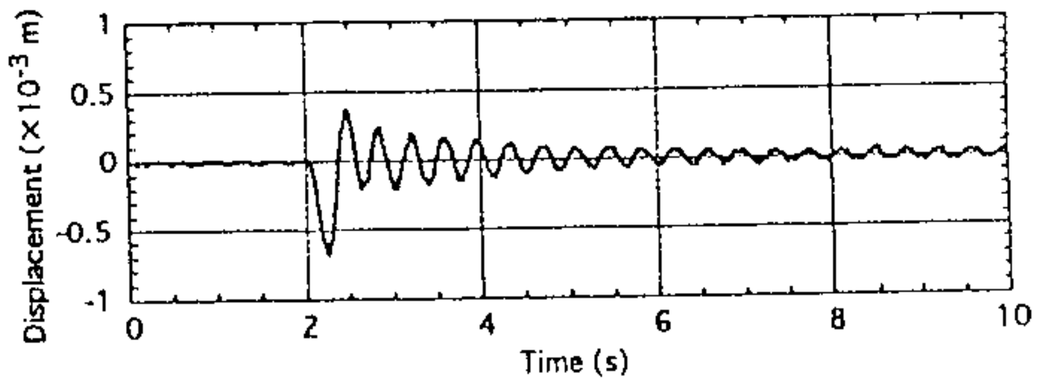

(a) Improper Configuration of Permanent Magnet

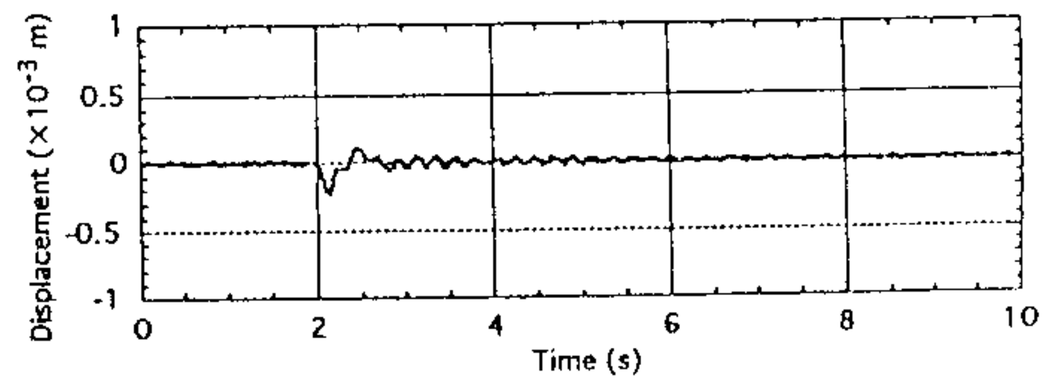

(b) Proper Configuration of Permanent Magnet

Fig.11 Disturbance Characteristics.

VII. Conclusion

This paper reports the development of a simplified H^{∞} control and proper configuration of permanent magnet for radial disturbance attenuation applicable to repulsive type magnetic bearing system. The application of H^{∞} controller makes the system robust resulting a low cost high performance magnetic bearing system. Proper placement of stator permanent magnet helps to reduce effect of radial disturbance of the system.

References

[1] The *Magnetic Levitation Technical Committee* report of IEEJ, "Magnetic Levitation Systems and Magnetic Bearings", Ch.5, Corona Publishing Co. Ltd.,(1993) (in Japanese).

[2] T.Ohji, T.Miyamoto, S.Yamada and F.Matsumura, "One-Axis Controlled Repulsion Type magnetic Bearing Using Permanent Magnets", *Proceeding of JIEE, 7th Symphosium of Electromagnetics and Dynamics*, pp. 189-194, 1995(in Japanese).

[3] F.Matsumura and H.Kobayashi, "Fundamental Equation for Horizontal Shaft Magnetic Bearing and its Control System Design", *JIEE, Vol. 101C, No. 6*, pp.137-144, 1981.

[4] M.Fujita, F.Matsumura and M.Shimizu, "H^{∞} Robust Control Design for a Magnetic Suspension System", *Proceeding of 2nd ISMB*, pp 349-356, July, 1990, Tokyo, Japan.

[5] M.A.Franchek, "Selecting the Performance Weights for the μ and H^{∞} Synthesis Methods for SISO Regulating Systems," *Transc. of the ASME, Journal of Dynamic Systems, Measurement and Control*, Vol. 118, March 1996, pp 126-131.